AMERICAN FIREWORKS STANDARD LABORATORY

美国烟花标准试验所

AFSL™

OCTOBER 2017 VERSION

STANDARDS FOR CONSUMER FIREWORKS

烟花爆竹标准

ABOUT THE STANDARDS

The American Fireworks Standards Laboratory (AFSL) is an independent, non-profit corporation established in 1989 by members of the fireworks industry to reduce the potential risks of injury associated with fireworks. AFSL appointed a Standards Committee to develop and maintain voluntary safety and quality Standards for all fourteen classifications of 1.4G consumer fireworks. The Standards Committee is comprised of representatives from the fireworks industry, federal and state regulatory authorities, consumers, and technical experts.

Standards developed by the committee incorporate all performance and labeling requirements of the regulations for fireworks established by the U.S. Consumer Product Safety Commission and applicable regulations governing transportation, shipping and storage established by the Department of Transportation. Also, the Committee developed provisions above and beyond the federal regulations to further improve safety and provide good manufacturing practices for producing consistent, high quality products. Any product that complies with the AFSL Standards also meets all federal requirements.

The Standards Committee continuously monitors the Standards to assure that any modifications to federal regulations are incorporated. In addition, as product designs change and technology improves, the Committee reviews and revises the Standards as necessary to assure that innovations in the manufacturing process do not compromise the safety of the product.

AFSL has established a testing and certification program for products manufactured in China to determine whether they are being produced in conformance with the Standards. Participation in the program by manufacturers as well as U.S. importers is voluntary.

AFSL has provided copies of the Standards to all factories that participate in the program to provide manufacturing guidelines. In addition, U.S. importers, their agents, or trading companies in China may request that fireworks be tested in China by an independent, internationally renowned testing laboratory retained by AFSL. A random sample taken from each shipping Lot is tested to the provisions of the applicable Standard. If the test indicates compliance with the AFSL Standard, a sticker bearing the AFSL registered service mark is applied to the shipping carton as proof of testing.

Because the testing program does not evaluate each item within the shipping Lot, the application of the AFSL mark to the shipping carton is not a guarantee that each item within the shipment complies with the Standards. However, the mark is an assurance that a randomly selected sample from the lot has been tested and met all requirements.

Any questions regarding the Standards should be addressed to the AFSL office at 7316 Wisconsin Avenue, Suite 214, Bethesda, MD 20814; telephone: 301-907-9115; facsimile: 301-907-9117; e-mail: afslhq@afsl.org; Website: www.afsl.org.

John D. Rogers
Executive Director

© 2009 American Fireworks Standards Laboratory. All Right Reserved.

TABLE OF CONTENTS

AFSL 101 ..... **1**

STANDARD FOR COMBINATION ITEMS **1**

CHAPTER 1 GENERAL 3
CHAPTER 2 PRODUCT DESIGN 4
CHAPTER 3 LABELING 5
CHAPTER 4 SHIPPING 9

AFSL 102 ..... **10**

STANDARD FOR COMETS, MINES, AND SHELLS **10**

CHAPTER 1 GENERAL 13
CHAPTER 2 PRODUCT DESIGN 14
CHAPTER 3 PERFORMANCE 18
CHAPTER 4 LABELING 19
CHAPTER 5 SHIPPING 22

AFSL 103 ..... **23**

STANDARD FOR FIRECRACKERS **23**

CHAPTER 1 GENERAL 26
CHAPTER 2 PRODUCT DESIGN 26
CHAPTER 3 LABELING 28
CHAPTER 4 SHIPPING 29

AFSL 103A **31**

STANDARD FOR FUSELESS FIRECRACKERS **31**

CHAPTER 1 GENERAL 33
CHAPTER 2 PRODUCT DESIGN 33
CHAPTER 3 LABELING 34
CHAPTER 4 SHIPPING 35

AFSL 104 ..... **37**

STANDARD FOR FOUNTAINS **37**

CHAPTER 1 GENERAL 40
CHAPTER 2 PRODUCT DESIGN 41
CHAPTER 3 PERFORMANCE 44
CHAPTER 4 LABELING 44
CHAPTER 5 SHIPPING 47

AFSL 105 ..... **48**

STANDARD FOR GROUND SPINNERS AND CHASERS **48**

CHAPTER 1 GENERAL 50
CHAPTER 2 PRODUCT DESIGN 51
CHAPTER 3 LABELING 52
CHAPTER 4 SHIPPING 53

AFSL 106 ..... **54**

© 2009 American Fireworks Standards Laboratory. All Right Reserved.

STANDARD FOR SPECIALTY ITEMS **54**

CHAPTER 1 GENERAL 56
CHAPTER 2 PRODUCT DESIGN 57
CHAPTER 3 LABELING 58
CHAPTER 4 SHIPPING 60

AFSL 107 ..... **61**

STANDARD FOR PARTY, TRICK, AND TOY SMOKE DEVICES **61**

CHAPTER 1 GENERAL 63
CHAPTER 2 PRODUCT DESIGN 64
CHAPTER 3 LABELING 67
CHAPTER 4 SHIPPING 68

AFSL 108 ..... **70**

STANDARD FOR RELOADABLE TUBE AERIAL SHELLS **70**

CHAPTER 1 GENERAL 73
CHAPTER 2 PRODUCT DESIGN 74
CHAPTER 3 PERFORMANCE 78
CHAPTER 4 LABELING 78
CHAPTER 5 SHIPPING 81

AFSL 109 ..... **82**

STANDARD FOR ROMAN CANDLES **82**

CHAPTER 1 GENERAL 84
CHAPTER 2 PRODUCT DESIGN 85
CHAPTER 3 LABELING 87
CHAPTER 4 SHIPPING 88

AFSL 110 ..... **90**

STANDARD FOR SKY ROCKETS, MISSILES, AND HELICOPTERS **90**

CHAPTER 1 GENERAL 93
CHAPTER 2 PRODUCT DESIGN 94
CHAPTER 3 PERFORMANCE 96
CHAPTER 4 LABELING 96
CHAPTER 5 SHIPPING 99

AFSL 111 ..... **100**

STANDARD FOR HAND-HELD SPARKLING DEVICES **100**

CHAPTER 1 GENERAL 102
CHAPTER 2 PRODUCT DESIGN 102
CHAPTER 3 LABELING 104
CHAPTER 4 SHIPPING 105

AFSL 112 ..... **107**

STANDARD FOR WHEELS **107**

CHAPTER 1 GENERAL 110
CHAPTER 2 PRODUCT DESIGN 111
CHAPTER 3 LABELING 112

© 2009 American Fireworks Standards Laboratory. All Right Reserved.

CHAPTER 4 SHIPPING 113

AFSL 113 115

STANDARD FOR GIRANDOLAS 115

CHAPTER 1 GENERAL 118
CHAPTER 2 PRODUCT DESIGN 119
CHAPTER 3 PERFORMANCE 120
CHAPTER 4 LABELING 121

AFSL 114 123

STANDARD FOR CRACKLING STRIPS 123

CHAPTER 1 GENERAL 125
CHAPTER 2 PRODUCT DESIGN 126
CHAPTER 3 LABELING 127
CHAPTER 4 SHIPPING 128

AFSL 115 129

STANDARD FOR MISCELLANEOUS GROUND ITEMS 129

CHAPTER 1 GENERAL 131
CHAPTER 2 PRODUCT DESIGN 132
CHAPTER 3 LABELING 134
CHAPTER 4 SHIPPING 135

APPENDIX A : PROHIBITED AND PERMITTED CHEMICALS 136

APPENDIX B : CAUTIONARY LABELING REQUIREMENTS FOR CONSUMER FIREWORKS 139

APPENDIX C : SUMMARY OF U.S. DEPARTMENT OF TRANSPORTATION REGULATIONS 143

APPENDIX D : TEST METHOD FOR MULTIPLE-TUBE FIREWORKS 147

APPENDIX E: DIAGRAM FOR TRAJECTORY OF MINES AND SHELLS 148

APPENDIX F: SCHEMATIC OF TRAJECTORY AND PERFORMANCE FOR RELOADABLE SHELLS 149

APPENDIX G : SCHEMATIC OF TRAJECTORY REQUIREMENTS FOR SKYROCKETS 150

APPENDIX H : SCHEMATIC OF TRAJECTORY REQUIREMENTS FOR MISSILES AND HELICOPTERS 151

APPENDIX I : RICE HULLS POLICY 152

APPENDIX J : ASSORTMENTS 153

APPENDIX K : INCENDIARY SPARK IGNITION TEST PROCEDURE FOR CRACKLING STRIP PACKAGING 154

APPENDIX L : TEST PROCEDURE FOR MULTIPLE-TUBE FOUNTAINS USING THERMAL DETECTOR. 157

APPENDIX M : REQUIREMENTS FOR SPECIAL WARNING LABEL ON RELOADABLE AERIAL SHELL LAUNCHER TUBE 158

© 2009 American Fireworks Standards Laboratory. All Right Reserved.

AFSL 101

STANDARD FOR COMBINATION ITEMS

OCTOBER 2017 EDITION

© 2009 American Fireworks Standards Laboratory. All Right Reserved.

TABLE OF CONTENTS

Chapter 1 GENERAL

1-1 Introduction

1-2 Definitions

Chapter 2 PRODUCT DESIGN

2-1 General Requirements
- 2-1.1 Sharp Fragments
- 2-1.2 Impact Sensitivity
- 2-1.3 Similarity to Candy or Other Foods
- 2-1.4 Pyrotechnic Leakage
- 2-1.5 Prohibited Chemical
- 2-1.6 Assembly of Items
- 2-1.7 Burnout and Blowout
- 2-1.8 Residual Burn Requirement
- 2-1.9 Limits of Chemical Composition
- 2-1.10 Requirements for Fuse
- 2-1.11 Performance
- 2-1.12 Names and Graphics Inconsistent with Labeling

2-2 Specific Requirements for Aerial Items

2-3 Specific Requirements for Base Items

Chapter 3 LABELING

3-1 General Requirements

3-2 ProductSpecific Labeling

Chapter 4 SHIPPING

4-1 General Requirements

© 2009 American Fireworks Standards Laboratory. All Right Reserved.

STANDARD FOR COMBINATION ITEMS

Chapter 1 GENERAL

1-1 INTRODUCTION

1-1.1 This Standard applies to the manufacture of fireworks items that consist of significant Combinations of devices defined separately in other AFSL Standards.

NOTE: Incidental effects such as comet tails or whistles are not considered to be significant for purposes of defining a Combination.

1-1.2 This Standard applies to devices intended primarily for use by the general public.

1-1.3 This Standard enables manufacturers to produce fireworks devices in accordance with applicable United States requirements for labeling, composition, and performance.

1-1.4 This Standard excludes items that are defined as “Specialty Items” in Section 1-2.10 of the Standard for Specialty Items.

1-2 DEFINITIONS

1-2.1 Base - The platform to which one or more tubes of a fireworks device are attached to provide a stable platform for the functioning of the item.

1-2.2 Blowout - The unintended release of a pressure effect from other than the intended orifice of a fireworks device.

1-2.3 Burnout - The unintended escape of flame through the wall of a pyrotechnic chamber during functioning of a fireworks device.

1-2.4 Chemical Composition - All pyrotechnic and explosive composition contained in a fireworks device (see also "Pyrotechnic Composition" and "Explosive Composition" definitions).

1-2.5 Explosive Composition - Any chemical compound or mixture, the primary purpose of which is to function by explosion, producing an audible effect in a fireworks device.

NOTE: The lift charge of an item subject to an AFSL Standard is not considered to be explosive composition.

1-2.6 Pyrotechnic Composition - A chemical mixture which, on burning and without explosion, produces visible displays, bright lights, whistles, or motion.

1-2.7 Safety Fuse - A fuse consisting of a thread-wrapped powder train that has been coated with lacquer sufficient to prevent side ignition when tested in accordance with the AFSL test procedure for side ignition resistance.

1-2.8 Side Ignition - The ignition of a fuse at a point other than at the tip when the side of the fuse is placed in direct contact with the glowing tip on a lighted cigarette.

© 2009 American Fireworks Standards Laboratory. All Right Reserved.

Chapter 2 PRODUCT DESIGN

2-1 GENERAL REQUIREMENTS

2-1.1 The construction of the item must be of such composition and design that no sharp fragments are produced upon functioning (or malfunctioning).

2-1.2 The finished item must not be impact sensitive or have a risk of prematurE ignition or explosion during transportation, handling, or normal operation.

2-1.3 The finished item must not be designed or packaged in such a manner that it could be confused with candy or other foods if it is of a size or configuration that could be ingested.

2-1.4 The construction of the item must be adequate to prevent leakage or loss of the chemical composition at any time.

2-1.5 The chemical composition of the item must not contain prohibited chemicals except as trace impurities.

NOTE: Prohibited and permitted chemicals are listed in **Appendix A**.

2-1.6 Items subject to this Standard must be assembled and packaged so as to prevent damage to the items during transportation, handling, and normal operation.

2-1.7 The pyrotechnic chamber of fireworks devices subject to this Standard must be constructed in a manner that allows functioning in a normal manner without burnout or blowout.

2-1.8 The finished item containing Multiple Tube Fountains and/or Mine and Shell Devices, including tubes and internal construction material, must not continue to burn or re-ignite after functioning. See Appendix L for Test Procedure.

2-1.9 Limits for Chemical Composition Content

2-1.9.1 A component of a Combination item must not exceed the chemical composition limits defined for that component in the appropriate Standard.

2-1.9.2 Combination items consisting of several individual items must not exceed a total chemical composition content of 200 grams (7.25 ounces).

NOTE: Any Combination that consists of more than one tube where the tubes are securely attached to a single wood or plastic base, and the tubes are separated from each other on the base by a distance of at least 0.50 inches (12.7 mm) must not contain in excess of 500 grams (17.5 ounces) total chemical composition.

2-1.10 Requirments for Fuse

2-1.10.1 The fuse used as the lead into the body of the item must be only safety fuse or other fuse that has been protected to resist side ignition.

2-1.10.2 The fuse burning time from ignition of the tip of the fuse to ignition of the device must be at least 4 seconds but not more than 8 seconds.

2-1.10.3 For multi-effect or multi-tube items, timing between effects (or tubes) must not exceed 10 seconds, except that when a multi-effect device changes from a less active effect such as a Fountain effect to a more active effect such as a Mine, Shell, or Comet

© 2009 American Fireworks Standards Laboratory. All Right Reserved.

effect, the timing between effects must not exceed 3 seconds.

2-1.10.4 Exposed fuses, including connecting fuses between tubes, must resist side ignition for at least 3 seconds.

NOTE: Items requiring a restricted orifice for proper functioning and containing less than 6 grams (0.21 ounces) of pyrotechnic composition do not require a fuse that is resistant to side ignition.

2-1.10.5 The entire fuse must be securely attached to the item so that it will support either the weight of the item plus 227 grams (8 ounces) or double the weight of the item, whichever is less, without separation from the item.

2-1.10.6 The location of the fuse must be obvious or must be clearly identified on the exterior of the device.

2-1.10.7 Devices subject to this Standard must contain only one ignition fuse. Additional fuses, points of ignition, openings for fuse insertion, or points for ignition transfer are not permitted.

2-1.10.8 Fireworks devices subject to this Standard must have covered fuses that sucessfully resist ignition from open flames, hot surfaces and incendiary sparks when tested in accordance with test procedures found in PYR1129 – 2013 edition and any additional requirements specified by AFSL.

2-1.11 The performance of any Combination item must not exceed the performance limits for the individual component item as stated in the appropriate AFSL Standard for that item.

2-1.12 Items subject to this Standard must not bear a name or bear graphics suggesting a use of the product that is inconsistent with the cautionary labeling instructions.

2-2 SPECIFIC REQUIREMENTS FOR AERIAL ITEMS

2-2.1 Flaming debris from aerial devices must extinguish at least 3 meters (9.75 feet) above the ground.

2-2.2 Streamers used in devices subject to this standard must be constructed of flame retardant and of non-electrically conductive material."

2-3 SPECIFIC REQUIREMENTS FOR BASE ITEMS

2-3.1 The base or bottom of fireworks devices that are operated in a standing, upright position must have the minimum horizontal dimensions or the diameter of the base equal to at least one-third of the height of the device, including any base or cap affixed thereto, but excluding any protruding fuse.

2-3.2 In addition, any item designed to operate on a base must be able to pass a tilt test for stability (static test) appropriate for that item (see individual Standards).

Chapter 3 LABELING

3-1 GENERAL REQUIREMENTS

© 2009 American Fireworks Standards Laboratory. All Right Reserved.

3-1.1 Individual items must bear cautionary labeling giving a signal word, statement of hazard(s), and instructions for proper use.

3-1.2 All cautionary labeling must be located prominently and in the English language in conspicuous and legible type in contrast by typography, layout or color with any other printed or graphic matter on the label.

NOTE: See **Appendix B** for specific details regarding placement, conspicuousness, prominence, and minimum type size requirements for cautionary labels.

3-1.3 The name and place of business of the manufacturer, packer, distributor, or seller must appear on the label of each product.

3-1.4 The common or usual name of the product, such as "Consumer Fireworks UN0336" or "Consumer Fireworks 1.4G," must appear on the label of each product.

3-2 PRODUCT-SPECIFIC LABELING

3-2.1 Effects: Fountain and Ground Spinner

CAUTION
EMITS SHOWERS OF SPARKS
SPINS ON GROUND
FLAMMABLE

USE ONLY UNDER CLOSE ADULT SUPERVISION.
FOR OUTDOOR USE ONLY.
PLACE ON HARD, FLAT SURFACE.
DO NOT HOLD IN HAND.
LIGHT FUSE AND GET AWAY.

3-2.2 Effects: Fountain and Firecracker

WARNING
EXPLOSIVE
EMITS SHOWERS OF SPARKS

USE ONLY UNDER CLOSE ADULT SUPERVISION.
FOR OUTDOOR USE ONLY.
PLACE ON LEVEL SURFACE.
DO NOT HOLD IN HAND.
LIGHT FUSE AND GET AWAY.

3-2.3 Effects: Fountain and Mine and Shell (Single Tube)

WARNING
EMITS SHOWERS OF SPARKS
SHOOTS FLAMING BALLS (AND REPORTS, if applicable)

USE ONLY UNDER CLOSE ADULT SUPERVISION.
FOR OUTDOOR USE ONLY.
PLACE UPRIGHT ON HARD, SMOOTH SURFACE.
DO NOT HOLD IN HAND.
NEVER HAVE ANY PART OF YOUR BODY OVER THE DEVICE WHEN LIGHTING THE FUSE.
LIGHT FUSE AND GET AWAY.
NEVER RELIGHT A FUSE THAT FAILS TO IGNITE THE DEVICE.

3-2.4 Effects: Fountain and Mine and Shell (Multiple Tube)

WARNING
EMITS SHOWERS OF SPARKS
SHOOTS FLAMING BALLS (AND REPORTS, if applicable)

USE ONLY UNDER CLOSE ADULT SUPERVISION.
FOR OUTDOOR USE ONLY.
DO NOT HOLD IN HAND.
NEVER HAVE ANY PART OF YOUR BODY OVER THE DEVICE WHEN LIGHTING THE FUSE.
LIGHT FUSE AND GET AWAY.
NEVER RELIGHT A FUSE THAT FAILS TO IGNITE THE DEVICE.
PLACE UPRIGHT AND USE ONLY ON CONCRETE, ASPHALT, OR OTHER HARD LEVEL SURFACE.
THIS ITEM MAY TIP OVER IF USED ON GRASS OR OTHER UNEVEN SURFACES AND SERIOUS INJURY COULD RESULT.

© 2009 American Fireworks Standards Laboratory. All Right Reserved.

3-2.5 Effects: Ground Spinner and Helicopter with Report

WARNING
SPINS ON GROUND
EMITS FLAME AND SPARKS
SHOOTS UPWARD WITH REPORT

USE ONLY UNDER CLOSE ADULT SUPERVISION.
FOR OUTDOOR USE ONLY.
PLACE ON HARD, FLAT, AND OPEN SURFACE WITH FUSE POINTING UP.
DO NOT HOLD IN HAND.
LIGHT FUSE AND GET AWAY.

3-2.6 Effects: Ground Spinner and Firecracker

WARNING
EXPLOSIVE
SPINS ON GROUND
EMITS FLAME AND SPARKS

USE ONLY UNDER CLOSE ADULT SUPERVISION.
FOR OUTDOOR USE ONLY.
DO NOT HOLD IN HAND OR THROW FIRECRACKERS.
REMOVE FROM PACKAGING AND UNROLL BEFORE USE.
PLACE ON HARD, FLAT SURFACE.
LIGHT FUSE AND GET AWAY.
NEVER ATTEMPT TO RELIGHT A FUSE.
NEVER ATTEMPT TO LIGHT FIRECRACKERS IN A CLOSED CONTAINER.
NEVER CARRY FIRECRACKERS IN CLOTHING.

3-2.7 Fountain and Helicopter without Reports

WARNING
EMITS FLAME AND SPARKS
SHOOTS UPWARD

USE ONLY UNDER CLOSE ADULT SUPERVISION.
FOR OUTDOOR USE ONLY.
PLACE ON HARD FLAT, AND OPEN SURFACE.
DO NOT HOLD IN HAND.
LIGHT FUSE AND GET AWAY.

3-2.8 Effecrs: Fountains and Missiles without Report (Single Tube)

WARNING
EMITS SHOWERS OF SPARKS
FLAMMABLE MISSLE

USE ONLY UNDER CLOSE ADULT SUPERVISION.
FOR OUTDOOR USE ONLY.
PLACE ON HARD, OPEN SURFACE.
DO NOT HOLD IN HAND.
LIGHT FUSE AND GET AWAY.
THIS MISSILE TRAVELS AT HIGH SPEEDS AND CAN TRAVEL LONG DISTANCES.
MISUSE MAY RESULT IN INJURY OR FIRE.

3-2.9 Effects: Ground Spinners and Mine-and-Shell Devices without Report (Multiple Tubes)

WARNING
SPINS ON GROUND
SHOOTS FLAMING BALLS

USE ONLY UNDER CLOSE ADULT SUPERVISION.
FOR OUTDOOR USE ONLY.
DO NOT HOLD IN HAND.
NEVER HAVE ANY PART OF YOUR BODY OVER THE DEVICE WHEN LIGHTING THE FUSE.
LIGHT FUSE AND GET AWAY.
NEVER RELIGHT A FUSE THAT FAILS TO IGNITE THE DEVICE.
PLACE UPRIGHT AND USE ONLY ON CONCRETE, ASPHALT, OR OTHER HARD, LEVEL SURFACE.
THIS ITEM MAY TIP OVER IF USED ON GRASS OR OTHER UNEVEN SURFACES AND SERIOUS INJURY COULD RESULT.

© 2009 American Fireworks Standards Laboratory. All Right Reserved.

3-2.10 Fountain and Missile with Report (Single Tube)

WARNING
EMITS SHOWERS OF SPARKS
FLAMMABLE MISSILE WITH REPORT

USE ONLY UNDER CLOSE ADULT SUPERVISION.
FOR OUTDOOR USE ONLY.
PLACE ON HARD, OPEN SURFACE.
DO NOT HOLD IN HAND.
LIGHT FUSE AND GET AWAY.
THIS MISSILE TRAVELS AT HIGH SPEEDS AND CAN TRAVEL LONG DISTANCES.
MISUSE MAY RESULT IN INJURY OR FIRE.

3-2.11 Multiple Shot Mine and Shell Device and Helicopter

WARNING
SHOOTS FLAMING BALLS
SHOOTS UPWARD

USE ONLY UNDER CLOSE ADULT SUPERVISION.
FOR OUTDOOR USE ONLY.
DO NOT HOLD IN HAND.
NEVER HAVE ANY PART OF YOUR BODY OVER THE DEVICE WHEN LIGHTING THE FUSE.
LIGHT FUSE AND GET AWAY.
NEVER RELIGHT A FUSE WHICH FAILS TO IGNITE THE DEVICE.
PLACE UPRIGHT AND USE ONLY ON CONCRETE, ASPHALT, OR OTHER HARD LEVEL SURFACE.
THIS ITEM MAY TIP OVER IF USED ON GRASS OR OTHER UNEVEN SURFACE AND SERIOUS INJURY COULD RESULT.

3-2.12 Ground Spinner and Helicopter without Report

WARNING
SPINS ON GROUND.
EMITS FLAME AND SPARKS
SHOOTS UPWARD

USE ONLY UNDER CLOSE ADULT SUPERVISION.
FOR OUTDOOR USE ONLY.
PLACE ON HARD, FLAT AND OPEN SURFACE.
DO NOT HOLD IN HAND.
LIGHT FUSE AND GET AWAY

3-2.13 Effects: Wheels and Fountains

CAUTION
SPINS ON GROUND
EMITS SHOWERS OF SPARKS

USE ONLY UNDER CLOSE ADULT SUPERVISION.
FOR OUTDOOR USE ONLY
PLACE ON LEVEL SURFACE
DO NOT HOLD IN HAND
LIGHT FUSE AND GET AWAY

3-2.14 Effects: Strobes and Firecrackers

WARNING
EXPLOSIVE
EMITS FLASHES OF LIGHT

USE ONLY UNDER CLOSE ADULT SUPERVISON.
FOR OUTDOOR USE ONLY.
PLACE ON GROUND.
DO NOT HOLD IN HAND OR THROW FIRECRACKERS.
LIGHT FUSE AND GET AWAY
NEVER ATTEMPT TO RELIGHT A FUSE.
NEVER ATTEMPT TO LIGHT FIRECRACKERS IN A CLOSE CONTAINER.
NEVER CARRY FIRECRACKERS IN CLOTHING.

3-2.15 Smoke Device and Firecrackers

WARNING
EXPLOSIVE
EMITS SMOKE

USE ONLY UNDER CLOSE ADULT SUPERVISION.
FOR OUTDOOR USE ONLY.
PLACE ON GROUND.
DO NOT HOLD IN HAND OR THROW FIRECRACKERS.
LIGHT FUSE AND GET AWAY.
NEVER ATTEMPT TO RELIGHT A FUSE.
NEVER ATTEMPT TO LIGHT FIRECRACKERS IN A CLOSED CONTAINER.
NEVER CARRY FIRECRACKERS IN CLOTHING.

© 2009 American Fireworks Standards Laboratory. All Right Reserved.

3-2.16 Multiple Tube Fountains and/or Mine and Shell Devices

CAUTION
MAY RE-IGNITE. SOAK WITH WATER AFTER USE.

NOTE: The label must be placed on the top surface of the device next to the fuse, where feasible. Where not feasible, the label must be placed on the flat surface closest to the fuse. The label must be consistent with AFSL labeling requirements in **Appendix B**.

Chapter 4 SHIPPING

4-1 GENERAL REQUIREMENTS

4-1.1 All consumer fireworks must comply with certain regulations promulgated by the United States Department of Transportation. These regulations govern approval of fireworks for shipment, construction and testing of their shipping containers, and the marking and labeling of the containers.

NOTE: See **Appendix C** for a summary of these requirements. However, **Appendix C** is only a summary and not a complete discussion. Title 49 of the United States Code should be consulted for complete information.

4-1.2 Product design, packaging, and case packing must produce a finished shipping case in which simultaneous explosion of all the items does not result from ignition of one item in the shipping case.

4-1.3 The package must not be so difficult to open that the contents might be damaged as a result of opening.

4-1.4 These items must be securely packaged for shipping in such a way that they are protected from moisture or physical damage during transportation and so that there is no risk of any of the contents escaping from the shipping case.

© 2009 American Fireworks Standards Laboratory. All Right Reserved.

AFSL 102

STANDARD FOR COMETS, MINES, AND SHELLS

OCTOBER 2017 EDITION

THIS STANDARD INCLUDES SPECIFICATIONS FOR THE FOLLOWING PRODUCTS:

Classification 20 - Comets, Mine, and Shell Devices, Single Tube

Classification 21 - Comets, Mine, and Shell Devices, Multiple Tube

© 2009 American Fireworks Standards Laboratory. All Right Reserved.

TABLE OF CONTENTS

Chapter 1 GENERAL

1-1 Introduction

1-2 Definitions

Chapter 2 PRODUCT DESIGN

2-1 General Requirements
- 2-1.1 Sharp Fragments
- 2-1.2 Impact Sensitivity
- 2-1.3 Similarity to Candy or Other Foods
- 2-1.4 Pyrotechnic Leakage
- 2-1.5 Prohibited Chemicals
- 2-1.6 Assembly of Items
- 2-1.7 Residual Burn Requirement
- 2-1.8 Tubes
- 2-1.9 Bases
- 2-1.10 Requirements for Fuse
- 2-1.11 Plugs
- 2-1.12 Non-Electrically Conducative Components for Streamers
- 2-1.13 Names and Graphics Inconsistent with Labeling

2-2 Specific Requirements for Multiple-Tube Shells or Comets
- 2-2.1 Maximum Chemical Composition for Indvidual Shells
- 2-2.2 Break Charge Requirements
- 2-2.3 Explosive Composition Limits for Components
- 2-2.4 Lift Charge Limits
- 2-2.5 Maximum Chemical Composition for Device

2-3 Specific Requirements for Single-Tube Shells and Comets
- 2-3.1 Maximum Chemical Composition per Tube
- 2-3.2 Break Charge Requirements
- 2-3.3 Explosive Composition Limits for Components
- 2-3.4 Lift Charge Limits

2-4 Specific Requirements for Single and Multiple-Tube Mines
- 2-4.1 Total Chemical Composition Per Tube
- 2-4.2 Explosive Composition Limit
- 2-4.3 Total Chemical Composition Per Device

© 2009 American Fireworks Standards Laboratory. All Right Reserved.

Chapter 3 PERFORMANCE

3-1 General Stability Requirements for Comets, Mines, and Shells

3-2 Specific Performance Requirements for Shells and Comets

3-3 Specific Performance Requirements for Mines

Chapter 4 LABELING

4-1 General Labeling Requirements

4-2 Product-Specific Labeling

Chapter 5 SHIPPING

5-1 General Shipping Requirements

© 2009 American Fireworks Standards Laboratory. All Right Reserved.

STANDARD FOR COMETS, MINES, AND SHELLS

Chapter 1 GENERAL

1-1 INTRODUCTION

1-1.1 This Standard applies to the manufacture of a class of Comets, Mines, and Shells designed to fire various visual and audible effects into the air. The finished unit ordinarily consists of a single fully assembled, non-reloadable tube or a number of fully assembled, non-reloadable tubes on a common base.

1-1.2 This Standard applies to devices intended primarily for use by the general public.

1-1.3 This Standard enables manufacturers to produce fireworks devices in accordance with applicable United States requirements for labeling, composition, and performance.

1-1.4 This Standard excludes items that are defined as “Specialty Items” in Section 1-2.10 of the Standard for Specialty Items.

1-2 DEFINITIONS

1-2.1 Base - The platform to which one or more tubes of a fireworks device are attached to provide a stable launching platform.

1-2.2 Black Powder - A mixture of potassium nitrate, sulfur and charcoal intended to produce a pyrotechnic effect.

1-2.3 Black Powder Equivalent - A mixture containing potassium nitrate and non-metallic fuel. The use of any other mixture as a break charge requires empirical test data demonstrating that the mixture is equivalent in performance to black powder.

1-2.4 Blowout - The unintended release of a pressure effect from other than the intended orfiice of the device.

1-2.5 Burnout - The unintended escape of flame through the wall of a pyrotechnic chamber during functioning of a fireworks device.

1-2.6 Break Charge - The interior charge which, when ignited by the time fuse, breaks apart an Aerial Shell at the top of its climb and ignites the pyrotechnic effect(s).

1-2.7 Chemical Composition - All pyrotechnic and explosive composition contained in a fireworks device (see also "Pyrotechnic Composition" and "Explosive Composition" definitions).

1-2.8 Comet - A hard pellet or disc of pyrotechnic composition that emerges from the launcher tube already ignited and that leaves a trail of sparks until consumed.

1-2.9 Explosive Composition - Any chemical compound or mixture, the primary purpose of which is to function by explosion, producing an audible effect in a fireworks device.

© 2009 American Fireworks Standards Laboratory. All Right Reserved.

NOTE: The lift charge of an item subject to this Standard is not considered to be explosive composition.

1-2.10 Lift Charge (Propellant) - Chemical composition consisting of black powder or equivalent that is used to propel one or more visible or audible aerial effects into the air.

1-2.11 Mine - A fireworks device designed to produce a low-level aerial effect where the effects are propelled into the air by the lift charge.

1-2.12 Near-Vertical – A maximum deviation of 30 degrees from vertical in the flight trajectory for comet, mines and shells and reloadable tube aerial shell devices.

1-2.13 Plug - The non-flammable material pressed or otherwise firmly affixed to the bottom of a Shell or Mine launcher tube and intended to prevent blowout at the bottom of the tube.

1-2.14 Propellant - See "Lift Charge" above.

1-2.15 Pyrotechnic Composition - A chemical mixture which, on burning and without explosion, produces visible displays, bright lights, whistles, or motion.

1-2.16 Report - A loud noise or "bang."

1-2.17 Safety Fuse - A fuse consisting of a thread-wrapped powder train that has been coated with lacquer sufficient to prevent side ignition when tested in accordance with the AFSL test procedure for side ignition resistance.

1-2.18 Sequential - Exhibits a clear audible and visual separation of firings between tubes of a multiple tube device.

1-2.19 Shell - An aerial projectile designed to be propelled into the air by the lift charge (propellant), wherein, at the peak of flight, a small bursting charge "breaks" the Shell and creates a display of stars, reports, or other effects.

1-2.20 Side Ignition - The ignition of a fuse at a point other than the tip when the side of the fuse is placed in direct contact with the glowing end of a burning cigarette.

1-2.21 Simultaneous - The lack of a clear audible and visual separation of firings between tubes of a multiple tube device.

1-2.22 Whistle - A small-tube device that produces a shrill noise resulting from the burning of pyrotechnic composition.

Chapter 2 PRODUCT DESIGN

2-1 GENERAL REQUIREMENTS

2-1.1 The construction of the item, including launcher tubes and shell casings when present, must be of such composition and design that no sharp fragments are produced upon functioning (or malfunctioning).

2-1.2 The finished item must not be impact sensitive or have a risk of premature ignition or explosion during transportation, handling, or normal operation.

2-1.3 The finished item must not be designed or packaged in such a manner that it

© 2009 American Fireworks Standards Laboratory. All Right Reserved.

could be confused with candy or other foods if it is of a size or configuration that could be ingested.

2-1.4 The construction of the item must be adequate to prevent leakage of the chemical composition at any time.

2-1.5 The chemical composition of the item must not contain prohibited chemicals except as trace impurities.

NOTE: Prohibited and Permitted chemicals are listed in **Appendix A.**

2-1.6 The device must be assembled and packaged so as to prevent damage to the item during transportation, handling, and normal operation.

2-1.7 The finished item, including tubes and internal construction materials, must not continue to burn or re-ignite after functioning. See **Appendix L** for Test Procedure.

2-1.8 Tubes

2-1.8.1 The tube intended for launching an aerial effect must be constructed of material that will not produce sharp fragments upon functioning and that is sufficiently rigid to retain its dimensions during transportation, handling, and normal operation.

2-1.8.2 Tubes must be constructed of material that will allow the item to function without burnout or blowout.

2-1.8.3 Tubes must be securely attached to the base so as not to separate or come loose during transportation, handling, or normal operation

2-1.8.4 Multiple-tube items must remain intact during functioning, with no separation of tubes.

NOTE: Exterior tubes containing multiple launching tube inserts are considered to be packaging.

2-1.8.5 Insert tubes with break charges must not contain pressed clay plugs, separators, or any other hard internal components capable of acting as a projectile when the insert bursts.

2-1.9 Bases

2-1.9.1 Bases must be made of material that will not break during transportation, handling, or normal operation.

2-1.9.2 Bases must remain firmly attached to the item during transportation, handling, and normal operation.

2-1.9.3 The base or bottom of fireworks devices that are operated in a standing upright position must have the minimum horizontal dimensions or the diameter of the base equal to at least one-third of the height of the device, including any base or cap affixed thereto, but excluding any protruding fuse.

2-1.10 Requirements for Fuse

2-1.10.1 The fuse used as the lead into the body of the item must be only safety fuse or other fuse that has been protected to resist side ignition.

2-1.10.2 The location of the fuse must be obvious or must be clearly identified on the exterior of the device.

© 2009 American Fireworks Standards Laboratory. All Right Reserved.

2-1.10.3 The fuse burning time from ignition of the tip of the fuse to ignition of the device must be at least 4 seconds but not more than 8 seconds.

2-1.10.4 Exposed fuses (both lead-in and connecting) must resist side ignition for at least 3 seconds.

2-1.10.5 For multiple-effect or multiple-tube items, the timing between effects (or tubes) must not exceed 10 seconds.

2-1.10.6 The entire fuse must be securely attached to the item so that it will support either the weight of the item plus 227 grams (8 ounces) or double the weight of the item, whichever is less, without separation from the item or other fuse components.

2-1.10.7 The lead fuse on any item containing a projectile with a gross weight exceeding 25 grams (0.9 ounces) must enter the body of the launcher tube through the side, near the base.

NOTE: Mines are not considered to be projectiles.

2-1.10.8 Devices subject to this Standard must contain only one ignition fuse. Additional fuses, points of ignition, openings for fuse insertion, or points for ignition transfer are not permitted.

2-1.10.9 All tubes on a base must be fused so that the tubes fire sequentially. If the fusing pattern includes division or branching, it must be designed to prevent two or more tubes from firing simultaneously.

2-1.10.10 The lead (initiating) fuse must be long enough to extend at least 2.5 centimeters (1 inch) outside the body of the item.

2-1.10.11 Fireworks devices subject to this Standard must have covered fuses that sucessfully resist ignition from open flames, hot surfaces and incendiary sparks when tested in accordance with test procedures found in PYR1129 – 2013 edition and any additional requirements specified by AFSL.

2-1.11 Plugs

2-1.11.1 The base plugs of individual tubes must be made of clay or other non-flammable material.

2-1.11.2 The plugs must be securely installed in the launcher tubes.

2-1.11.3 The material and construction of the plugs must resist breakage or separation during transportation, handling, and normal use, and must not produce sharp fragments if a shell bursts prematurely in the tube.

2-1.12 Streamers used in devices subject to this standard must be constructed of flame retardant and of non-electrically conductive material.

2-1.13 Items subject to this Standard must not bear a name or bear graphics suggesting a use of the product that is inconsistent with the cautionary labeling instructions.

2-2 SPECIFIC REQUIREMENTS FOR MULTIPLE-TUBE SHELLS OR COMETS

2-2.1 Shells or Comets intended to produce visual or audible effects must not

© 2009 American Fireworks Standards Laboratory. All Right Reserved.

contain more than 52 grams (1.8 ounces) of chemical composition per tube (including reports, break charge, effects and lift charge).

2-2.2 Break Charge

2-2.2.1 The break charge of individual Shells must consist of black powder or equivalent.

2-2.2.2 The break charge of individual Shells having an outside diameter of greater than 2.5 cm (1 inch) must not consist of more than 25% by weight of the chemical composition of the tube, or 10 grams (0.35 ounces), whichever is less.

2-2.2.3 The break charge of individual Shells having an outside diameter of 2.5 cm (1 inch) or less must not consist of more than 50% by weight of the chemical composition of the tube, or 10 gram (0.35 ounces), whichever is less.

2-2.3 Explosive components of Shells intended to produce reports must not contain more than 130 mg (2 grains) of explosive composition per report.

2-2.4 Lift charge (propellant) must not exceed 12 grams (0.4 ounces) per tube.

2-2.5 Any Shell device consisting of more than one tube must not contain in excess of 200 grams (7.2 ounces) total chemical composition.

NOTE: Any Shell or Comet device consisting of more than one tube where the tubes are securely attached to a single wood or plastic base and the tubes are separated from each other on the base by a distance of at least 12.7 mm (0.5 inches), must not contain in excess of 500 grams (17.5 ounces) total chemical composition.

2-3 Specific Requirements for Single-tube Shells and Comets

2-3.1 Single-tube Shells and Comets intended to produce visual or audible effects must not contain more than 60 grams (2.11 ounces) of total chemical composition (including reports, break charge and lift charge) per tube.

2-3.2 Break Charge

2-3.2.1 The break charge of individual Shells must consist of black powder or equivalent.

2-3.2.2 The break charge of individual Shells having an outside diameter of greater than 2.5 cm (1 inch) must not consist of more than 25% by weight of the chemical composition of the tube, or 10 grams (0.35 ounces), whichever is less.

2-3.2.3 The break charge of individual Shells having an outside diameter of 2.5 cm (1 inch) or less must not consist of more than 50% by weight of the chemical composition of the tube, or 10 grams (0.35 ounces), whichever is less.

2-3.3 Explosive components of Shells intended to produce reports must not contain more than 130 mg (2 grains) of explosive composition each.

2-3.4 Lift charge (propellant) must not exceed 20 grams (0.7 ounces) per tube.

2-4 Specific Requirements for Single and Multiple-tube Mines

© 2009 American Fireworks Standards Laboratory. All Right Reserved.

2-4.1 Single and multiple-tube Mines intended to produce visual or audible effects must not contain more than 40 grams (1.4 ounces) of chemical composition (including reports) per tube.

2-4.2 The explosive composition of a single Firecracker included in the device must not exceed 50 milligrams, exclusive of the Firecracker fuse.

2-4.3 Any Mine consisting of more than one tube must not contain more than 200 grams (7.2 ounces) total chemical composition.

NOTE: Any Mine device consisting of more than one tube where the tubes are securely attached to a single wood or plastic base and the tubes are separated from each other on the base by a distance of at least 12.7 mm (0.5 inches) must not contain in excess of 500 grams (17.5 ounces) total chemical composition.

Chapter 3 PERFORMANCE

3-1 General Stability Requirements For Comets, Mines, and Shells

3-1.1 Multiple-tube devices subject to this Standard that have any tube measuring 3.8 cm (1.5 inches) or more inside diameter must withstand a minimum tilt angle of 60 degrees when tested in accordance with the procedure in **Appendix D**.

3-1.2 Single-tube devices and multiple-tube devices that have tubes measuring less than 3.8 cm (1.5 inches) must remain upright when tilted 18 degrees from horizontal against their shortest base dimension.

3-1.3 Any multiple-tube Aerial Shell or Comet with any tube inside diameter of greater than 2.54 cm (1 inch) must not tip over when shot on a 2-inch thick medium density polyurethane foam pad.

3-2 Specific Performance Requirements for Shells and Comets

3-2.1 When fired in accordance with label instructions, Shells and Comets must be ejected in a near-vertical path.

3-2.2 The primary effect(s) must take place at or near the peak of flight, at a height of not less than 6 meters (20 feet).

3-2.3 The primary effects must extinguish at least 3 meters (9.75 feet) above the ground.

NOTE: Effects produced as part of the lift function, such as Comet tails produced upon ignition and whistles or audible effects produced as part of the lift function, are not considered primary effects.

3-2.4 Flaming debris must extinguish at least 3 meters (9.75 feet) above the ground.

NOTE: See **Appendix E** for a diagram of the trajectory provision of Mines and Shells.

3-3 Specific Performance Requirements For Mines

3-3.1 The width of the effect for Mines must not exceed a 4-meter (13-foot) radius.

NOTE: See **Appendix E** for a diagram of trajectory of Mines and Shells.

© 2009 American Fireworks Standards Laboratory. All Right Reserved.

Chapter 4 LABELING

4-1 General Requirements

4-1.1 Individual items must bear cautionary labeling giving a signal word, statement of hazard(s) and instructions for proper use.

4-1.2 All cautionary labeling must be located prominently and in the English language in conspicuous and legible type in contrast by typography, layout or color with any other printed or graphic matter on the label.

NOTE: See **Appendix B** for specific details regarding placement, conspicuousness, prominence, and minimum type size requirements for cautionary labels.

4-1.3 The name and place of business of the manufacturer, packer, distributor, or seller must appear on the label of each product.

4-1.4 The common or usual name of the product, such as "Consumer Fireworks UN0336" or "Consumer Fireworks 1.4G," must appear on the label of each product.

4-2 Product-Specific Labeling

4-2.1 Single-Tube Devices without Report (Classification 20)

WARNING
SHOOTS FLAMING BALLS

USE ONLY UNDER CLOSE ADULT SUPERVISION.
FOR OUTDOOR USE ONLY.
DO NOT HOLD IN HAND.
PLACE UPRIGHT ON HARD, SMOOTH SURFACE
NEVER HAVE ANY PART OF YOUR BODY OVER THE DEVICE WHEN LIGHTING THE FUSE.
LIGHT FUSE AND GET AWAY.
NEVER RELIGHT A FUSE THAT FAILS TO IGNITE THE DEVICE.

4-2.2 Single-Tube Devices with Report (Classification 20)

WARNING
SHOOTS FLAMING BALLSAND REPORTS

USE ONLY UNDER CLOSE ADULT SUPERVISION.
FOR OUTDOOR USE ONLY.
DO NOT HOLD IN HAND.
PLACE UPRIGHT ON HARD, SMOOTH SURFACE
NEVER HAVE ANY PART OF YOUR BODY OVER THE DEVICE WHEN LIGHTING THE FUSE.
LIGHT FUSE AND GET AWAY.
NEVER RELIGHT A FUSE THAT FAILS TO IGNITE THE DEVICE.

4-2.3 Multiple Tube Devices without Report (Classification 21)

WARNING
SHOOTS FLAMING BALLS

USE ONLY UNDER CLOSE ADULT SUPERVISION
FOR OUTDOOR USE ONLY.
DO NOT HOLD IN HAND.
PLACE UPRIGHT AND USE ONLY ON CONCRETE, ASPHALT, OR OTHER HARD, LEVEL SURFACE.
THIS ITEM MAY TIP OVER IF USED ON GRASS OR OTHER UNEVEN SURFACES AND SERIOUS INJURY COULD RESULT.
NEVER HAVE ANY PART OF YOUR BODY OVER THE DEVICE WHEN LIGHTING THE FUSE.
LIGHT FUSE AND GET AWAY.
NEVER RELIGHT A FUSE THAT FAILS TO IGNITE THE DEVICE.

© 2009 American Fireworks Standards Laboratory. All Right Reserved.

4-2.4 Multiple Tube Device with Report (Classification 21)

WARNING
SHOOTS FLAMING BALLS AND REPORTS

USE ONLY UNDER CLOSE ADULT SUPERVISION
FOR OUTDOOR USE ONLY.
DO NOT HOLD IN HAND.
PLACE UPRIGHT AND USE ONLY ON CONCRETE, ASPHALT, OR OTHER HARD, LEVEL SURFACE.
THIS ITEM MAY TIP OVER IF USED ON GRASS OR OTHER UNEVEN SURFACES AND SERIOUS INJURY COULD RESULT.
NEVER HAVE ANY PART OF YOUR BODY OVER THE DEVICE WHEN LIGHTING THE FUSE.
LIGHT FUSE AND GET AWAY.
NEVER RELIGHT A FUSE THAT FAILS TO IGNITE THE DEVICE.

4-2.5 Single Tube Devices that Shoot Whistles in Air with Report

WARNING
SHOOTS WHISTLE IN AIR AND REPORTS

USE ONLY UNDER CLOSE ADULT SUPERVISION
FOR OUTDOOR USE ONLY.
DO NOT HOLD IN HAND.
PLACE UPRIGHT ON HARD , SMOTH SURFACE.
NEVER HAVE ANY PART OF YOUR BODY OVER THE DEVICE WHEN LIGHTING THE FUSE.
LIGHT FUSE AND GET AWAY.
NEVER RELIGHT A FUSE THAT FAILS TO IGNITE THE DEVICE.

4-2.6 Single Tube Devices that Shoot Whistles in air without Report

WARNING
SHOOTS WHISTLE IN AIR

USE ONLY UNDER CLOSE ADULT SUPERVISION
FOR OUTDOOR USE ONLY.
DO NOT HOLD IN HAND.
PLACE UPRIGHT ON HARD , SMOOTH SURFACE.
NEVER HAVE ANY PART OF YOUR BODY OVER THE DEVICE WHEN LIGHTING THE FUSE.
LIGHT FUSE AND GET AWAY.
NEVER RELIGHT A FUSE THAT FAILS TO IGNITE THE DEVICE.

4-2.7 Multiple-Tube Devices that Shoot Whistle in Air without Report (no specific classification use 20 or 21 as appropriate)

WARNING
FLAMMABLE
SHOOTS WHISTLE IN AIR

USE ONLY UNDER CLOSE ADULT SUPERVISION
FOR OUTDOOR USE ONLY.
DO NOT HOLD IN HAND.
PLACE UPRIGHT AND USE ONLY ON CONCRETE, ASPHALT, OR OTHER HARD, LEVEL SURFACE.
THIS ITEM MAY TIP OVER IF USED ON GRASS OR OTHER UNEVEN SURFACES AND SERIOUS INJURY COULD RESULT.
NEVER HAVE ANY PART OF YOUR BODY OVER THE DEVICE WHEN LIGHTING THE FUSE.
LIGHT FUSE AND GET AWAY.
NEVER RELIGHT A FUSE THAT FAILS TO IGNITE THE DEVICE.

© 2009 American Fireworks Standards Laboratory. All Right Reserved.

4-2.8 Multiple-Tube Devices that Shoot Whistle in Air With Report (no specific classification use 20 or 21 as appropriate)

WARNING
FLAMMABLE WITH REPORT
SHOOTS WHISTLE IN AIR

USE ONLY UNDER CLOSE ADULT SUPERVISION
FOR OUTDOOR USE ONLY.
DO NOT HOLD IN HAND.
PLACE UPRIGHT AND USE ONLY ON CONCRETE, ASPHALT, OR OTHER HARD, LEVEL SURFACE.
THIS ITEM MAY TIP OVER IF USED ON GRASS OR OTHER UNEVEN SURFACES AND SERIOUS INJURY COULD RESULT.
NEVER HAVE ANY PART OF YOUR BODY OVER THE DEVICE WHEN LIGHTING THE FUSE.
LIGHT FUSE AND GET AWAY.
NEVER RELIGHT A FUSE THAT FAILS TO IGNITE THE DEVICE.

4-2.9 Single-Tube Devices that Shoot Inert Components (e.g., streamers, confetti, flags) into Air without Secondary Pyrotechnic Effects (e.g., break charge that scatters the effects)

WARNING
FLAMMABLE
SHOOTS CONFETTI INTO AIR (or: STREAMERS, FLAGS, etc., depending on the effects that are present)

USE ONLY UNDER CLOSE ADULT SUPERVISION
FOR OUTDOOR USE ONLY.
DO NOT HOLD IN HAND.
PLACE UPRIGHT ON HARD, SMOOTH SURFACE.
NEVER HAVE ANY PART OF YOUR BODY OVER THE DEVICE WHEN LIGHTING THE FUSE.
LIGHT FUSE AND GET AWAY.
NEVER RELIGHT A FUSE THAT FAILS TO IGNITE THE DEVICE.

4-2.10 Multiple-Tube Devices that Shoot Inert Components (e.g., streamers, confetti, flags) into Air without secondary pyrotechnic effects (e.g., break charge that scatters the effects)

WARNING
FLAMMABLE
SHOOTS CONFETTI(or: STREAMERS, FLAGS, etc.)INTO THE AIR

USE ONLY UNDER CLOSE ADULT SUPERVISION
FOR OUTDOOR USE ONLY.
DO NOT HOLD IN HAND.
PLACE UPRIGHT AND USE ONLY ON CONCRETE, ASPHALT, OR OTHER HARD, LEVEL SURFACE.
THIS ITEM MAY TIP OVER IF USED ON GRASS OR OTHER UNEVEN SURFACES AND SERIOUS INJURY COULD RESULT.
NEVER HAVE ANY PART OF YOUR BODY OVER THE DEVICE WHEN LIGHTING THE FUSE.
LIGHT FUSE AND GET AWAY.
NEVER RELIGHT A FUSE THAT FAILS TO IGNITE THE DEVICE.

4-2.11 Multiple-tube Mine and Shell Devices subject to this Standard must bear a warning label which reads: “May re-ignite. Soak with water after use.

WARNING
MAY RE-IGNITE. SOAK WITH WATER AFTER USE.

NOTE: The label must be placed on the top surface, where feasible. Where not feasible, the label must be placed on the flat surface closest to the fuse. The label must be consistent with AFSL labeling requirements in **Appendix B**.

© 2009 American Fireworks Standards Laboratory. All Right Reserved.

4-2.12 Roman Candle Barrages with Spike

WARNING
SHOOTS FLAMING BALLS WITH REPORTS

USE ONLY UNDER CLOSE ADULT SUPERVISION
FOR OUTDOOR USE ONLY.
DO NOT HOLD IN HAND.
NEVER HAVE ANY PART OF YOUR BODY OVER THE DEVICE WHEN LIGHTING THE FUSE.
LIGHT FUSE AND GET AWAY.
NEVER RELIGHT A FUSE THAT FAILS TO IGNITE THE DEVICE.
STICK SPIKE END IN GROUND AND POINT AWAY FROM PEOPLE OR FLAMMABLE MATERIAL.
THIS DEVICE MAY TIP OVER IF SPIKE IS NOT SECURELY INSERTED INTO GROUND AND SERIOUS INJURY COULD RESULT.

Chapter 5 SHIPPING

5-1 General Requirements

5-1.1 All consumer fireworks must comply with certain regulations promulgated by the United States Department of Transportation. These regulations govern approval of fireworks for shipment, construction and testing of their shipping containers, and the marking and labeling of the containers.

NOTE: See **Appendix C** for a summary of these requirements. However, **Appendix C** is only a summary and not a complete discussion. Title 49 of the United States Code should be consulted for complete information.

5-1.2 Product design, packaging, and case packing must produce a finished shipping case in which simultaneous explosion of all the items does not result from ignition of one item in the shipping case.

5-1.3 The package must not be so difficult to open that the contents might be damaged as a result of opening.

5-1.4 These items must be securely packaged for shipping in such a way that they are protected from moisture or physical damage during transportation and so that there is no risk of any of the contents escaping from the shipping case.

© 2009 American Fireworks Standards Laboratory. All Right Reserved.

AFSL 103

STANDARD FOR FIRECRACKERS

OCTOBER 2017 EDITION

THIS STANDARD INCLUDES SPECIFICATIONS FOR THE FOLLOWING PRODUCT:

Classification 4 - Firecrackers

© 2009 American Fireworks Standards Laboratory. All Right Reserved.

TABLE OF CONTENTS

Chapter 1 GENERAL

1-1 Introduction

1-2 Definitions

Chapter 2 PRODUCT DESIGN

2-1 General Requirements
- 2-1.1 Sharp Fragments
- 2-1.2 Impact Sensitivity
- 2-1.3 Similarity to Candy or Other Foods
- 2-1.4 Pyrotechnic Leakage
- 2-1.5 Prohibited Chemicals
- 2-1.6 Assembly of Items
- 2-1.7 Limits for Explosive Composition
- 2-1.8 Only Explosive Composition Allowed
- 2-1.9 Flammability of Firecracker Tubes
- 2-1.10 Prohibition on Friction-Ignited Items
- 2-1.11 Fuse Location
- 2-1.12 Names or Graphics Inconsistent with Labeling

2-2 Specific Requirements for Braided Firecrackers (Strings)
- 2-2.1 Primary Fuse
- 2-2.2 Primary Fuse Burn Time
- 2-2.3 Covered Fuse Requirement
- 2-2.4 Burn Rate for Braided Strings
- 2-2.5 Uniform and Constant Burn Rate

2-3 Specific Requirements for Individually Fused, Single Units
- 2-3.1 Safety Fuse
- 2-3.2 Fuse Burn Time
- 2-3.3 Resistance to Side Ignition
- 2-3.4 Fuse Attachment
- 2-3.5 Covered Fuse Requirement
- 2-3.6 Consumer Fireworks Identification on Item

Chapter 3 LABELING

3-1 General Requirements

© 2009 American Fireworks Standards Laboratory. All Right Reserved.

3-2 Product-Specific Labeling

Chapter 4 SHIPPING

4-1 General Requirements

© 2009 American Fireworks Standards Laboratory. All Right Reserved.

STANDARD FOR FIRECRACKERS

Chapter 1 GENERAL

1-1 INTRODUCTION

1-1.1 This Standard applies to the manufacture of the traditional category of fireworks designed to produce only a single, small report at ground level. The unit of sale normally consists of several items with fuses braided together (strings) and packaged as a unit, but may be individually fused, single units in various types of packaging.

1-1.2 This Standard applies to devices intended primarily for use by the general public.

1-1.3 This Standard enables manufacturers to produce fireworks devices in accordance with applicable United States requirements for labeling, composition and performance.

1-1.4 This Standard excludes items that are defined as “Specialty Items” in Section 1-2.10 of the Standard for Specialty Items.

1-2 DEFINITIONS

1-1.5 Chemical Composition - All pyrotechnic and explosive composition contained in a fireworks device (see also "Pyrotechnic Composition" and "Explosive Composition" definitions).

1-1.6 Explosive Composition - Any chemical compound or mixture, the primary purpose of which is to function by explosion, producing an audible effect in a fireworks device.

1-1.7 Firecrackers – A small, paper-wrapped or cardboard tube containing Explosive Composition.

1-1.8 Primary Fuse - That portion of a Firecracker fuse that serves as the initial ignition point for a braided string of Firecrackers.

1-1.9 Pyrotechnic Composition - A chemical mixture that, on burning and without explosion, produces visible displays, bright lights, whistles, or motion.

1-1.10 Report - A loud noise or bang.

1-1.11 Safety Fuse - A fuse consisting of a thread-wrapped powder train that has been coated with lacquer sufficient to prevent side ignition when tested in accordance with the AFSL test procedure for side ignition resistance.

1-1.12 Side Ignition - The ignition of a fuse at other than the tip when the side of the fuse is placed in direct contact with the glowing end of a burning cigarette.

Chapter 2 PRODUCT DESIGN

© 2009 American Fireworks Standards Laboratory. All Right Reserved.

2-1 General Requirements

2-1.1 The construction of the item must be of such composition and design that no sharp fragments are produced upon functioning (or malfunctioning).

2-1.2 The finished item must not be impact sensitive or have a risk of premature ignition or explosion during transportation, handling, or normal operation.

2-1.3 The finished item must not be designed or packaged in such a manner that it could be confused with candy or other foods if it is of a size or configuration that could be ingested.

2-1.4 The construction of the item must be adequate to prevent leakage of the chemical composition at any time.

2-1.5 The chemical composition of the item must not contain prohibited chemicals except as trace impurities.

NOTE: Prohibited and permitted chemicals are listed in **Appendix A.**

2-1.6 The finished item must be assembled and packaged so as to prevent damage to the item during transportation, handling, and normal operation.

2-1.7 The explosive composition for a single Firecracker must not exceed 50 milligrams (exclusive of the fuse).

2-1.8 Firecrackers must not contain any pyrotechnic composition other than the explosive composition designed to produce a single report.

2-1.9 The Firecracker tube must not catch fire as a result of operation.

2-1.10 Firecrackers must not be capable of ignition by friction.

2-1.11 The location of the fuse must be obvious or be clearly identified on the exterior of the devices.

2-1.12 Items subject to this Standard must not bear a name, bear graphics or be a product design or physical form that suggests a use of the product that is inconsistent with the cautionary labeling instructions.

2-2 Specific Requirements For Packages of Braided Firecrackers (Strings)

2-2.1 Fuses on Firecracker strings must include a primary fuse (which may be integral).

2-2.2 The fuse burn time from ignition of the tip of the primary fuse to ignition of the device must be at least 4 seconds but not more than 8 seconds.

NOTE: Fuses for Firecracker strings are not required to resist side ignition.

2-2.3 Fireworks devices subject to this Standard must have covered fuses that sucessfully resist ignition from open flames, hot surfaces and incendiary sparks when tested in accordance with test procedures found in PYR1129 – 2013 edition and any additional requirements specified by AFSL.

2-2.4 Firecracker devices containing more than 100 Firecrackers, including braided strings of Firecrackers, must be fused in a manner that provides for only sequential

© 2009 American Fireworks Standards Laboratory. All Right Reserved.

ignition of the individual Firecrackers; sequential ignition is defined at a rate that does not exceed 125 individual Firecracker ignitions per second.

2-2.5 The functioning of individual units in the device or distinctive components thereof must be at a rate that is reasonably constant and uniform.

2-3 SPECIFIC REQUIREMENTS FOR FIRECRACKERS DESIGNED TO BE SOLD AS SINGLE INDIVIDUALLY FUSED UNITS (EVEN THOUGH PACKAGED AS MULTIPLE UNITS)

2-3.1 The fuse used as the lead into the body of the item must be only safety fuse or other fuse that has been protected to resist side ignition.

2-3.2 The fuse burning time from ignition of the tip of the primary fuse to ignition of the device must be at least 4 seconds but not more than 8 seconds.

2-3.3 Exposed fuses must resist side ignition for at least 3 seconds.

2-3.4 The fuse must be securely attached to the item so that it will support double the weight of the item without separation from the item.

2-3.5 Fireworks devices subject to this Standard must have covered fuses that sucessfully resist ignition from open flames, hot surfaces and incendiary sparks when tested in accordance with test procedures found in PYR1129 – 2013 edition and any additional requirements specified by AFSL.

2-3.6 Individual Firecrackers with an outside diameter greater than 6.4 mm (¼ inch) must be individually marked "Consumer Fireworks, 1.4G."

Chapter 3 LABELING

3-1 GENERAL REQUIREMENTS

3-1.1 Packages of Firecrackers must bear cautionary labeling giving a signal word, statement of hazard(s), and instructions for proper use.

3-1.2 All cautionary labeling must be located prominently and in the English language in conspicuous and legible type in contrast by typography, layout or color with any other printed or graphic matter on the label.

NOTE: See **Appendix B** for specific details regarding placement, conspicuousness, prominence, and minimum type size requirements for cautionary labels.

3-1.3 The name and place of business of the manufacturer, packer, seller, or distributor must appear on the label of each product.

3-1.4 The common or usual name of the product, such as "Consumer Fireworks UN0336" or "Consumer Fireworks 1.4G," must appear on the label of each product.

3-2 PRODUCT-SPECIFIC LABELING FOR FIRECRACKERS

3-2.1 Retail Packages for all Firecrackers and Individual Firecrackers with a casing that

© 2009 American Fireworks Standards Laboratory. All Right Reserved.

exceeds 9.5 mm (3/8 inch) outside diameter or 50 mm (2 inches) in length.

WARNING
EXPLOSIVE

USE ONLY UNDER CLOSE ADULT SUPERVISION.
FOR OUTDOOR USE ONLY.
DO NOT HOLD IN HAND OR THROW FIRECRACKERS.
PLACE PACK ON GROUND.
LIGHT FUSE AND GET AWAY.
NEVER ATTEMPT TO RELIGHT A FUSE.
NEVER ATTEMPT TO LIGHT FIRECRACKERS IN A CLOSED CONTAINER.
NEVER CARRY FIRECRACKERS IN CLOTHING.

3-2.2 Individual Firecrackers (casings greater than 6.4 mm [1/4 inch] but not more than 9.5 mm [3/8"] outside diameter or greater than 38 mm [1-1/2 inches] in length but not more than 2" (50 mm) in length).

WARNING: EXPLOSIVE
CAREFULLY READ OTHER CAUTIONS ON PACKAGE

NOTE: Firecrackers with individual casings equal to or less than 6.4 mm (1/4 inch) O.D. or 38 mm (1-1/2 inches) in length are not required to bear cautionary labeling on the individual casing.

3-2.3 Individually fused Firecracker with an outside diameter greater than 6.4 mm (¼ inch) must bear following identification.

Consumer Fireworks 1.4G

3-2.4 Firecracker Rolls

WARNING
EXPLOSIVE

USE ONLY UNDER CLOSE ADULT SUPERVISION.
FOR OUTDOOR USE ONLY.
DO NOT HOLD IN HAND OR THROW FIRECRACKERS.
REMOVE FROM PACKAGING AND UNROLL BEFORE USE.
PLACE PACK ON GROUND.
LIGHT FUSE AND GET AWAY.
NEVER ATTEMPT TO RELIGHT A FUSE.
NEVER ATTEMPT TO LIGHT FIRECRACKERS IN A CLOSED CONTAINER.
NEVER CARRY FIRECRACKERS IN CLOTHING.

Chapter 4 SHIPPING

4-1 GENERAL REQUIREMENTS

4-1.1 All consumer fireworks imported into the United States must comply with certain regulations promulgated by the United States Department of Transportation. These regulations govern approval of fireworks for shipment, construction and testing of their shipping containers, and the marking and labeling of the containers.

NOTE: See **Appendix C** for a summary of these requirements. However, **Appendix C** is only a summary and not a complete discussion. Title 49 of the United States Code should be consulted for complete information.

4-1.2 Product design, packaging, and case packing must produce a finished shipping case in which simultaneous explosion of all the items does not result from ignition of one item in the shipping case.

© 2009 American Fireworks Standards Laboratory. All Right Reserved.

4-1.3 The package must not be so difficult to open that the contents might be damaged as a result of opening.

4-1.4 These items must be securely packaged for shipping in such a way that they are protected from moisture or physical damage during transportation and so that there is no risk of any of the contents escaping from the shipping case.

© 2009 American Fireworks Standards Laboratory. All Right Reserved.

AFSL 103A

STANDARD FOR FUSELESS FIRECRACKERS

OCTOBER 2017 EDITION

THIS STANDARD INCLUDES SPECIFICATIONS FOR THE FOLLOWING PRODUCTS:

AFSL Classification 49 – Fuseless Firecrackers

© 2009 American Fireworks Standards Laboratory. All Right Reserved.

TABLE OF CONTENTS

Chapter 1 GENERAL

1-1 Introduction

1-2 Definitions

Chapter 2 PRODUCT DESIGN

2-1 General Requirements for Fuesless Firecrackers
- 2-1.1 Sharp Fragments
- 2-1.2 Impact Sensitivity
- 2-1.3 Similarity to Candy or Other Foods
- 2-1.4 Pyrotechnic Leakage
- 2-1.5 Prohibited Chemicals
- 2-1.6 Limits for Explosive Composition
- 2-1.7 Limits for Chemical Composition Content
- 2-1.8 Only Explosive Composition Allowed
- 2-1.9 Flammability of Firecracker Tubes
- 2-1.10 Drop Test Requirement for the Box of Fuseless Firecrackers
- 2-1.11 Prohibition on Friction-Ignited Items
- 2-1.12 Names or Graphics Inconsistent with Labeling
- 2-1.13 Limit for Retail Package
- 2-1.14 Drop Test Requirement for Individual Retail Package

Chapter 3 LABELING

3-1 General Labeling Requirements

3-2 Product-Specific Labeling

Chapter 4 SHIPPING

4-1 General Shipping Requirements

© 2009 American Fireworks Standards Laboratory. All Right Reserved.

STANDARD FOR FUSELESS FIRECRACKERS

Chapter 1 GENERAL

1-1 INTRODUCTION

1-1.1 This Standard applies to the manufacture of a class of Fuseless Firecrackers designed to produce only a single, report at ground level. The unit of sale normally consists of a package containing multiple paper or plastic tubes, without external ignition fuses, that are packed in sawdust.

1-1.2 This Standard applies to devices intended primarily for use by the general public.

1-1.3 This Standard enables manufacturers to produce fireworks devices in accordance with applicable United States requirements for labeling, composition, and performance.

1-1.4 This Standard applies only to devices that have been approved and assigned a transportation classification of Fireworks UN0337, 1.4S by the U.S. Department of Transportation.

1-2 DEFINITIONS

1-2.1 Chemical Composition – All pyrotechnic and explosive composition contained in a fireworks device (see also "Pyrotechnic Composition" and "Explosive Composition" definitions).

1-2.2 Explosive Composition – Any chemical compound or mixture, the primary purpose of which is to function by explosion, producing an audible effect in a fireworks device.

1-2.3 Pyrotechnic Composition - A chemical mixture which on burning and without explosion produces visible displays, bright lights, whistles, or motion.

1-2.4 Report – A loud noise or bang.

Chapter 2 PRODUCT DESIGN

2-2 GENERAL REQUIREMENTS FOR FUSELESS FIRECRACKERS

2-1.1 The construction of the item must be of such composition and design that no sharp fragments are produced upon functioning (including malfunmction).

2-1.2 The finished item must not be impact sensitive or have a risk of premature ignition or explosion during transportation and handling.

2-1.3 The finished item must not be designed or packaged in such a manner that it could be confused with candy or other foods if it is of a size or configuration that could be ingested.

© 2009 American Fireworks Standards Laboratory. All Right Reserved.

2-1.4 The construction of the item must be adequate to prevent leakage of the chemical composition at any time.

2-1.5 The chemical composition of the item must not contain prohibited substances except as trace impurities.

NOTE: Prohibited substances are listed in **Appendix A.**

2-1.6 The explosive composition for a single Fuseless Firecracker must not exceed 50 milligrams (0.78 grains).

2-1.7 The explosive composition shall not contain >1mg of silver fulminate, >5% red phosphorus by weight, or any metal powder that is less than 270 mesh (53 microns) in particle size.

2-1.8 Fuseless Firecrackers must not contain any chemical composition other than the explosive composition designed to produce a single report.

2-1.9 The Fuseless Firecracker tube must not catch fire as a result of operation.

2-1.10 Individual Fuseless Firecrackers must not ignite when dropped onto concrete or equivalent non-yielding surface or asphalt from a height of 60 cm (2 feet).

2-1.11 The finished item must be assembled well enough to prevent damage to the item during transportation, handling and normal operation.

2-1.12 Items subject to this Standard must not bear a name or bear graphics suggesting a use of the product that is inconsistent with the cautionary labeling instructions.

2-1.13 The maximum number of Fuseless Firecrackers per individual retail sales package shall be 20 units, packed with an equal or greater volume of sawdust or similar impact-absorbing material.

2-1.14 No more than one Fuseless Firecracker shall ignite inside a sealed retail package when the package is dropped onto a concrete or asphalt surface from a height of 152 cm (5 feet).

Chapter 3 LABELING

3-1 GENERAL REQUIREMENTS

3-1.1 Package of Fuseless Firecrackers must bear cautionary labeling giving a signal word, statement of hazard(s) and instruction for proper use.

3-1.2 Individual Fuseless Firecrackers with an outside diameter greater than 6.4 mm (¼ inches) must be individually marked “Consumer Fireworks, 1.4S”.

3-1.3 All cautionary labeling must be located prominently and in the English language in conspicuous and legible type in contrast by typography, layout or color with any other printed or graphic matter on the label.

NOTE: See **Appendix B** for specific details regarding placement, conspicuousness,

© 2009 American Fireworks Standards Laboratory. All Right Reserved.

prominence, and minimum type size requirements for cautionary labels.

3-1.4 The name and place of business of the manufacturer, packer, seller, or distributor must appear on the label of each product, or each retail sales package if the individual unit is too small to accommodate the wording.

3-1.5 The common or usual name of the product, such as "Consumer Fireworks UN0336" or "Consumer Fireworks 1.4G," must appear on the label of each retail sales package.

3-1.6 The DOT approval number (EX Number or FC Number) and year of manufacture of the devices must appear on each retail sales package.

3-2 PRODUCT-SPECIFIC LABELING

3-2.1 Retail Packages for all Fuseless Firecrackers and Individual Fuseless Firecrackers with a casing that exceeds 9.5 mm (3/8 inch) outside diameter or 50 mm (2 inches) in length.

WARNING
EXPLOSIVE

USE ONLY UNDER CLOSE ADULT SUPERVISION.
FOR OUTDOOR USE ONLY.
HOLD ONE FUSELESS FIRECRACKER AT A TIME.
FOR IGNITION, THROW FUSELESS FIRECRACKER AGAINST A HARD SURFACE.
DO NOT THROW FIRECRACKERS AT PEOPLE OR ANIMALS.
NEVER CARRY FIRECRACKERS IN CLOTHING.

3-2.2 Individual Fuseless Firecracker casing that are greater than 6.4 mm (¼ inch) but not more than 9.5 mm (3/8 inch) outside diameter or greater than 38 mm (1-1/2 inches) but not more than 50 mm (2 inches) in length.

WARNING: EXPLOSIVE

CAREFULLY READ OTHER CAUTIONS ON PACKAGE.

NOTE: Firecrackers with individual casings equal to or less than 6.4 mm (¼ inch) O.D. or 38 mm (1-1/2 inches) in length are not required to bear cautionary labeling on the individual casing.

3-2.3 Individually Fuseless Firecracker with an outside diameter greater than 6.4 mm (¼ inch) must bear following identification.

Consumer Fireworks 1.4S

Chapter 4 SHIPPING

4-1 GENERAL REQUIREMENTS

4-1.1 All consumer fireworks imported into the United States must comply with certain regulations promulgated by the United States Department of Transportation. These regulations govern approval of fireworks for shipment, construction and testing of their shipping containers, and the marking and labeling of the containers.

NOTE: See **Appendix C** for a summary of these requirements. However, **Appendix C** is only a summary and not a complete discussion. Title 49 of the United

© 2009 American Fireworks Standards Laboratory. All Right Reserved.

States Code should be consulted for complete information.

4-1.2 Product design, packaging, and case packing must produce a finished shipping case in which simultaneous explosion of most or all of the items does not result from ignition of one item in the shipping case.

4-1.3 The package must not be so difficult to open that the contents might be damaged as a result of opening.

4-1.4 These items must be securely packaged for shipping in such a way that they are protected from moisture or physical damage during transportation and so that there is no risk of any of the contents escaping from the shipping case.

© 2009 American Fireworks Standards Laboratory. All Right Reserved.

AFSL 104

STANDARD FOR FOUNTAINS

OCTOBER 2017 EDITION

THIS STANDARD INCLUDES SPECIFICATIONS FOR THE FOLLOWING PRODUCTS:

Classification 6 - Base Fountains, Single Tube

Classification 7 - Base Fountains - Multiple Tube

Classification 8 - Cone Fountains

Classification 9 – Reloadable Fountains

Classification 10 - Handle Fountains

Classification 11 - California Candles

Classification 12 - Spike Fountains

Classification 18 - Handle Torches

Classification 19 - Base Torches

Classification 46 - Base Whistles

Classification 50 – Nitrocellulose Fountains

© 2009 American Fireworks Standards Laboratory. All Right Reserved.

TABLE OF CONTENTS

Chapter 1 GENERAL

1-1 Introduction

1-2 Definitions

Chapter 2 PRODUCT DESIGN

2-1 General Requirements
- 2-1.1 Sharp Fragments
- 2-1.2 Impact Sensitivity
- 2-1.3 Similarity to Candy or Other Foods
- 2-1.4 Pyrotechnic Leakage
- 2-1.5 Prohibited Chemicals
- 2-1.6 Assembly of Item
- 2-1.7 Burnout and Blowout
- 2-1.8 Residual Burn Requirement
- 2-1.9 Limits for Pyrotechnic Composition
- 2-1.10 Requirements for Fuse
- 2-1.11 Plugs
- 2-1.12 Names or Graphics Inconsistent with Labeling

2-2 Specific Requirements for Tube and Cone Items
- 2-2.1 Base Brittleness
- 2-2.2 Base Attachment
- 2-2.3 Base-to-Height Ratio
- 2-2.4 12-Degree Tilt Test

2-3 Specific Requirements for Handle and Spike Items
- 2-3.1 Attachment
- 2-3.2 Expulsion of Plug
- 2-3.3 Handle Free of Pyrotechnic Composition
- 2-3.4 Exposed Handle Length
- 2-3.5 Distance from Plug to End of Handle
- 2-3.6 Blunt Tip
- 2-3.7 Sharp Fragments
- 2-3.8 Spike Rigidity

© 2009 American Fireworks Standards Laboratory. All Right Reserved.

2-4 Specific Requirements for Reloadable Fountain Items
2-4.1 Requirement for “THIS END UP” on Insert
2-4.2 Requirements for Reloadable Fountain Base Tube

Chapter 3 PERFORMANCE

3-1 Limits of Visual Effects
3-1.1 Base and Spike Items - Maximum Diameter
3-1.2 Base and Spike Items - Maximum Height
3-1.3 Hand-held Items - Maximum Diameter
3-1.4 Hand-held Items - Maximum Length
3-1.5 Flame Length
3-1.6 Limits on Visual Effects for Nitrocellulose Fountains
3-1.7 Limites on Pyrotechnic Effects

Chapter 4 LABELING

4-1 General Requirements

4-2 Product-Specific Labeling

Chapter 5 SHIPPING

5-1 General Requirements

© 2009 American Fireworks Standards Laboratory. All Right Reserved.

STANDARD FOR FOUNTAINS

Chapter 1 GENERAL

1-1 INTRODUCTION

1-1.1 This Standard applies to the manufacture of the traditional category of Fountains designed to produce showers of various colored sparks. Whistles, smoke, and crackling effects may also be included as part of the overall fountain effect. The unit of sale usually consists of a fully assembled single-container unit or a package consisting of multiple reloadable units designed to be operated from a base tube, which must be included in the package.

1-1.2 Fountain-type devices that contain reports, Ground Spinners, and comparable effects are subject to the AFSL Standard for Combination devices.

1-1.3 This Standard applies to devices intended primarily for use by the general public.

1-1.4 This Standard enables manufacturers to produce fireworks devices in accordance with applicable United States requirements for labeling, composition, and performance.

1-1.5 This Standard excludes items that are defined as “Specialty Items” in Section 1-2.10 of the Standard for Specialty Items.

1-2 DEFINITIONS

1-2.1 Base - The platform to which one or more tubes of a fireworks device are attached to provide a stable launching platform.

1-2.2 Blowout - The unintended release of a pressure effect from other than the intended orifice of the device.

1-2.3 Burnout - The unintended escape of flame through the wall of a pyrotechnic chamber during functioning of a fireworks device.

1-2.4 California Candle - A hand-held tube containing pyrotechnic composition which emits showers of sparks when ignited.

1-2.5 Chemical Composition - All pyrotechnic and explosive composition contained in a fireworks device (see also "Pyrotechnic Composition" and "Explosive Composition" definitions).

1-2.6 Crackle - Spark-like bursts accompanied by a popping or snapping sound, produced by granules or flakes of pyrotechnic composition.

1-2.7 Nitrocellulose Fountain – A fountain containing nitrocellulose (of less than 12.6% nitrogen by weight) as the primary chemical component. Metal sparks or color effects are typically produced. Devices may have a base, spike, or handle.

1-2.8 Pyrotechnic Composition - A chemical mixture that, on burning and without explosion, produces visible displays, bright lights, whistles, or motion.

© 2009 American Fireworks Standards Laboratory. All Right Reserved.

1-2.9 Plug - The non-flammable material pressed or otherwise firmly affixed to the bottom of the pyrotechnic chamber of a Fountain and intended to prevent failure of the assembly in a hazardous manner.

1-2.10 Safety Fuse - A fuse consisting of a thread-wrapped powder train that has been coated with lacquer sufficient to prevent side ignition when tested in accordance with the AFSL test procedure for side ignition resistance.

1-2.11 Side Ignition - The ignition of a fuse at other than the tip when the side of the fuse is placed in direct contact with the glowing end of a burning cigarette.

1-2.12 Torch - A cylindrical tube containing pyrotechnic composition that produces a colored flame upon ignition.

1-2.13 Whistle - A small-tube device that produces a shrill noise as a result of the burning of pyrotechnic composition.

Chapter 2 PRODUCT DESIGN

2-1 GENERAL REQUIREMENTS

2-1.1 The construction of the item must be of such composition and design that no sharp fragments are produced upon functioning (or malfunctioning).

2-1.2 The finished item must not be impact sensitive or have a risk of premature ignition or explosion during transportation, handling, or normal operation.

2-1.3 The finished item must not be designed or packaged in such a manner that it could be confused with candy or other foods if it is of a size or configuration that could be ingested.

2-1.4 The construction of the item must be adequate to prevent leakage of the chemical composition at any time.

2-1.5 The chemical composition of the item must not contain prohibited chemicals except as trace impurities.

NOTE: Prohibited and permitted chemicals are listed in **Appendix A.**

2-1.6 Fountains must be assembled so as to prevent damage to the items during transportation, handling, and normal operation.

2-1.7 Fountains must be constructed of material that will allow the item to function without burnout or blowout.

2-1.8 The finished item, including tubes and internal construction material, must not continue to burn or re-ignite after functioning. See **Appendix L** for Test Procedure.

2-1.9 Limits for Pyrotechnic Composition Content

2-1.9.1 Hand-held Fountains must not contain more than 75 grams (2.6 ounces) total of pyrotechnic composition.

2-1.9.2 Single-tube Fountains and reloadable Fountain inserts must not contain more than 75 grams (2.6 ounces) total of pyrotechnic composition each.

© 2009 American Fireworks Standards Laboratory. All Right Reserved.

2-1.9.3 Cone Fountains must not contain more that 50 grams (1.8 ounces) total of pyrotechnic composition.

2-1.9.4 Multiple-tube Fountains must not contain more than 200 grams (7.2 ounces) total of pyrotechnic composition.

NOTE: Any Fountain device consisting of more than one tube where the tube is securely attached to a single wood or plastic base, and the tubes are separated from each other on the base by a distance of at least 0.50 inches (12.7 mm) must not contain in excess of 500 grams (17.5 ounces) total chemical composition.

NOTE: For multiple-tube Fountains, the maximum content of pyrotechnic composition per tube is 75 grams (2.6 ounces).

2-1.9.5 Nitrocellulose Fountains must not contain more than 15 grams (0.53 ounces) total pyrotechnic composition.

2-1.10 Requirements for Fuse

2-1.10.1 The fuse used as the lead into the body of the item or reloadable insert must be only safety fuse or other fuse that has been protected to resist side fuse ignition.

2-1.10.2 The fuse burning time from ignition of the tip of the fuse to ignition of the device must be at least 4 seconds but not more than 8 seconds.

2-1.10.3 Exposed fuses must resist side ignition for at least 3 seconds.

2-1.10.4 The entire fuse must be securely attached to the item so that it will support either the weight of the item plus 227 grams (8 ounces) or double the weight of the item, whichever is less, without separation from the item.

2-1.10.5 For multi-effect or multi-tube items, the timing between effects (or tubes) must not exceed 10 seconds.

2-1.10.6 The location of the fuse must be obvious or must be clearly identified on the exterior of the Fountain.

2-1.10.7 The connecting fuse between tubes must resist side ignition for at least 3 seconds.

2-1.10.8 Devices subject to this Standard must contain only one ignition fuse. Additional fuses, points of ignition, openings for fuse insertion, or points for ignition transfer are not permitted.

2-1.10.9 For inserts used in reloadable fountains, the fuse must extend out of the top of the insert.

2-1.10.10 Nitrocellulose Fountains may use a point of ignition instead of a fuse, which shall not be subject to additional fuse requirements.

2-1.10.11 Fireworks devices subject to this Standard must have covered fuses that sucessfully resist ignition from open flames, hot surfaces and incendiary sparks when tested in accordance with test procedures found in PYR1129 – 2013 edition and any additional requirements specified by AFSL.

2-1.11 Fountains must have a firmly installed plug.

2-1.12 Items subject to this Standard must not bear a name or bear graphics suggesting a use of the product that is

© 2009 American Fireworks Standards Laboratory. All Right Reserved.

inconsistent with cautionary labeling instructions.

2-2 SPECIFIC REQUIREMENTS FOR TUBE, CONE, AND RELOADABLE ITEMS.

2-2.1 Bases must be made of material that will not break during transportation, handling, or normal operation.

2-2.2 Bases must remain firmly attached to the item during transportation, handling, and normal operation.

2-2.3 The base or bottom of a tube, or cone fountain, or reloadable insert, or a base tube loaded with a reloadable insert must have the minimum horizontal dimensions or the diameter of the base equal to at least one-third of the height of the device including any base or cap affixed thereto but excluding any protruding fuse.

2-2.4 Any tube or cone Fountain, reloadable insert, or base tube loaded with a reloadable insert, must remain upright when tilted 12 degrees from the horizontal against its shortest base dimension.

2-3 SPECIFIC REQUIREMENTS FOR HANDLE AND SPIKE ITEMS

2-3.1 Spikes or handles of these items must be securely attached or be an integral part of the item.

2-3.2 These items must have adequate provisions to prevent expulsion of the plug or flame through the handle.

2-3.3 Any handle area (including spikes) must be free of pyrotechnic composition.

2-3.4 Attached handles must have an exposed length of at least 10.2 centimeters (4 inches).

2-3.5 The distance from the bottom of the plug to the external blunt end of the spike must be at least 10.2 centimeters (4 inches) with at least 5.1 centimeters (2 inches) exposed.

NOTE: Nitrocellulose Fountains are exepmt from this requirement provided they have a spike with an exposed length of at least 5.1 centimeters (2 inches).

2-3.6 Spikes must have a blunt tip, not less than 3.2 millimeters (1/8 inch) in cross-section.

2-3.7 Spikes and handles must be constructed of materials that do not product sharp fragments when the item operates (or malfunctions).

2-3.8 Spikes must be constructed of a material that allows the device to be mounted in the ground.

2-4 SPECIFIC REQUIREMENTS FOR RELOADABLE FOUNTAIN ITEMS

2-4.1 Inserts used in reloadable fountains must bear the statement “THIS END UP” with an arrow indicating the direction in which the insert should be place inside the tube.

2-4.2 Reloadable Base Tubes.

2-4.2.1 The base tube must be constructed of material that will allow the item to function in a normal manner without burnout or blowout.

© 2009 American Fireworks Standards Laboratory. All Right Reserved.

2-4.2.2 The base tube must be constructed of material that is sufficiently rigid to retain its dimensions during transportation, handling, and normal operation.

2-4.2.3 The base tube must be able to withstand at least 2 times the intended number of uses without burnout, blowout, separation from the base or other malfunction.

2-4.2.4 The base tube must be securely attached to the base so as not to separate
or come loose during transportation, handling, or normal operation.

2-4.2.5 The base tube must not exceed the overall height of 6 inches (15 centimeters), including the base of the tube.

2-4.2.6 The base tube must be designed so that the fountain insert fits flush with the top of the base tube.

2-4.2.7 The base tube must be designed so that the fountain insert will not bind to allow for easy removal of the insert.

Chapter 3 PERFORMANCE

3-1 LIMIT OF VISUAL EFFECTS

3-1.1 Visual effects of base, spike, and reloadable Fountains must not extend beyond a 5-meter (16.4-foot) diameter circle at ground level.

3-1.2 Visual effects of base, spike, and reloadable Fountains must not extend beyond 5 meters (16.4 feet) in height.

3-1.3 Visual effects of hand-held Fountains must not extend beyond a 2 meters (6.6 feet) diameter.

3-1.4 Visual effects of hand-held Fountains must not extend beyond 2 meters (6.6 feet) in length.

3-1.5 The pyrotechnic composition must not produce a continuous flame longer than 0.5 meters (20 inches).

NOTE: Sparks produced as part of the effect are not considered to be continuous flame.

3-1.6 Visual effects of Nitrocellulose Fountains must not extend beyond 1 meter (3.3 feet) in length and pyrotechnic composition must not produce a continuous flame longer than 150 mm (6 inches).

3-1.7 Sparks or other pyrotechnic effects must not contact the user while the device is operated in accordance with cautionary labeling instructions.

Chapter 4 LABELING

4-1 GENERAL REQUIREMENTS

4-1.1 Individual items must bear cautionary labeling giving a signal word, statement of hazard(s), and instructions for proper use.

4-1.2 All cautionary labeling must be located prominently and in the English language in conspicuous and legible type in contrast by typography, layout or color with any other printed or graphic matter on the label.

© 2009 American Fireworks Standards Laboratory. All Right Reserved.

NOTE: See **Appendix B** for specific details regarding placement, conspicuousness, prominence, and minimum type size requirements for cautionary labels.

4-1.3 The name and place of business of the manufacturer, packer, seller, or distributor must appear on the label of each product.

4-1.4 The common or usual name of the product, such as "Consumer Fireworks UN0336" or "Consumer Fireworks 1.4G," must appear on the label of each product.

4-2 PRODUCT-SPECIFIC LABELING FOR FOUNTAINS

4-2.1 Base Fountains, Single- or Multiple-Tube, and Cone Fountains (Classifications 6, 7, 8)

CAUTION
EMITS SHOWERS OF SPARKS

USE ONLY UNDER CLOSE ADULT SUPERVISION.
FOR OUTDOOR USE ONLY.
PLACE ON LEVEL SURFACE.
DO NOT HOLD IN HAND.
LIGHT FUSE AND GET AWAY.

4-2.2 Fountains with Spikes (Classification 12)

CAUTION
EMITS SHOWERS OF SPARKS

USE ONLY UNDER CLOSE ADULT SUPERVISION.
FOR OUTDOOR USE ONLY.
STICK FIRMLY IN GROUND IN AN UPRIGHT POSITION.
DO NOT HOLD IN HAND.
LIGHT FUSE AND GET AWAY.

4-2.3 Hand-Held Fountains (Classification 10)

CAUTION
EMITS SHOWERS OF SPARKS

USE ONLY UNDER CLOSE ADULT SUPERVISION.
FOR OUTDOOR USE ONLY.
HOLD IN HAND – POINT AWAY FROM BODY, CLOTHING, AND FLAMMABLE MATERIAL.
LIGHT FUSE.

4-2.4 California Candles (Classification11)

CAUTION
EMITS SHOWERS OF SPARKS

USE ONLY UNDER CLOSE ADULT SUPERVISION.
FOR OUTDOOR USE ONLY.
HOLD IN HAND AT BOTTOM OF TUBE.
POINT AWAY FROM BODY SO THAT NEITHER END POINTS TOWARD BODY.
LIGHT FUSE.

4-2.5 Handle Torches (Classification 18)

CAUTION
EMITS SHOWERS OF SPARKS

USE ONLY UNDER CLOSE ADULT SUPERVISION.
FOR OUTDOOR USE ONLY.
HOLD IN HAND – POINT AWAY FROM BODY, CLOTHING, AND FLAMMABLE MATERIAL.
LIGHT FUSE.

4-2.6 Base Torch (Classification 19)

CAUTION
EMITS SHOWERS OF SPARKS

USE ONLY UNDER CLOSE ADULT SUPERVISION.
FOR OUTDOOR USE ONLY.
PLACE UPRIGHT ON LEVEL GROUND.
DO NOT HOLD IN HAND.
LIGHT FUSE AND GET AWAY.

© 2009 American Fireworks Standards Laboratory. All Right Reserved.

4-2.7 Base Whistle Devices That Operate on the Ground (Classification 46)

CAUTION
FLAMMABLE

USE ONLY UNDER CLOSE ADULT SUPERVISION.
FOR OUTDOOR USE ONLY.
DO NOT HOLD IN HAND.
PLACE ON LEVEL SURFACE.
LIGHT FUSE AND GET AWAY.

4-2.8 Smoke Fountains – Hand Held

CAUTION
FLAMABLE

USE ONLY UNDER CLOSE ADULT SUPERVISION.
FOR OUTDOOR USE ONLY.
HOLD IN HAND AT BOTTOM OF TUBE.
POINT AWAY FROM BODY, CLOTHING, OR OTHER FLAMMABLE MATERIAL.
LIGHT FUSE.

4-2.9 Fountains – Bottle Rocket Type

CAUTION
EMITS SHOWERS OF SPARKS

USE ONLY UNDER CLOSE ADULT SUPERVISION.
FOR OUTDOOR USE ONLY.
STICK FIRMLY IN GROUND IN AN UPRIGHT POSITION.
REMOVE CAP TO EXPOSE FUSE. (or: REMOVE CAP FOR LIGHTING.)
DO NOT HOLD IN HAND.
LIGHT FUSE AND GET AWAY.

4-2.10 Reloadable – Type Fountain Insert

CAUTION
EMITS SHOWERS OF SPARKS

USE ONLY UNDER CLOSE ADULT SUPERVISION.
FOR OUTDOOR USE ONLY.
PLACE BASE TUBE ON LEVEL SURFACE.
INSERT FOUNTAIN INTO BASE WITH ARROW AND FUSE POINTING UP.
DO NOT HOLD IN HAND.
LIGHT FUSE AND GET AWAY.

4-2.11 Reloadable – Type Fountain Base Unit

CAUTION
EMITS SHOWERS OF SPARKS

USE BASE ONLY WITH FOUNTAIN INSERTS PACKAGED WITH THIS ITEM.
USE ONLY UNDER CLOSE ADULT SUPERVISION.
FOR OUTDOOR USE ONLY.
PLACE BASE TUBE ON LEVEL SURFACE.
INSERT FOUNTAIN INTO BASE WITH ARROW AND FUSE POINTING UP.
DO NOT HOLD IN HAND.
LIGHT FUSE AND GET AWAY.

4-2.12 Nitrocellulose Fountains

CAUTION
EMITS SHOWERS OF SPARKS

USE ONLY UNDER CLOSE ADULT SUPERVISION.
FOR OUTDOOR USE ONLY.
STICK FIRMLY IN GROUND IN AN UPRIGHT POSITION.
DO NOT HOLD IN HAND.
LIGHT TIP AND GET AWAY.

Warning label on the retail package just below the name of the product

WARNING
NOT INTENDED FOR INDOOR USE.

© 2009 American Fireworks Standards Laboratory. All Right Reserved.

4-2.13 Multiple-tube Fountains subject to this Standard must bear a warning label which reads: "May re-ignite. Soak with water after use."

CAUTION
MAY RE-IGNITE. SOAK WITH WATER AFTER USE.

NOTE: The label must be placed on the top surface of the device next to the fuse, where feasible. Where not feasible, the label must be placed on the flat surface closest to the fuse. The label must be consistent with AFSL labeling requirements in **Appendix B**.

Chapter 5 SHIPPING

5-1 GENERAL REQUIREMENTS

5-1.1 All consumer fireworks imported into the United States must comply with certain regulations promulgated by the United States Department of Transportation. These regulations govern approval of fireworks for shipment, construction and testing of their shipping containers, and the marking and labeling of the containers.

NOTE: See **Appendix C** for a summary of these requirements. However, **Appendix C** is only a summary and not a complete discussion. Title 49 of the United States Code should be consulted for complete information.

5-1.2 Product design, packaging, and case packing must produce a finished shipping case in which simultaneous explosion of all the items does not result from ignition of one item in the shipping case.

5-1.3 The package must not be so difficult to open that the contents might be damaged as a result of opening.

5-1.4 These items must be securely packaged for shipping in such a way that they are protected from moisture or physical damage during transportation and so that there is no risk of any of the contents escaping from the shipping case.

© 2009 American Fireworks Standards Laboratory. All Right Reserved.

AFSL 105

STANDARD FOR GROUND SPINNERS AND CHASERS

OCTOBER 2017 EDITION

THIS STANDARD INCLUDES SPECIFICATIONS FOR THE FOLLOWING PRODUCTS:

Classification 14 - Ground Spinners

Classification 48 - Chasers

© 2009 American Fireworks Standards Laboratory. All Right Reserved.

TABLE OF CONTENTS

Chapter 1 GENERAL

1-1 Introduction

1-2 Definitions

Chapter 2 PRODUCT DESIGN

2-1 General Requirements
- 2-1.1 Sharp Fragments
- 2-1.2 Impact Sensitivity
- 2-1.3 Similarity to Candy or Other Foods
- 2-1.4 Pyrotechnic Leakage
- 2-1.5 Prohibited Chemicals
- 2-1.6 Assembly of Items
- 2-1.7 Burnout and Blowout
- 2-1.8 Limits for Pyrotechnic Composition
- 2-1.9 Requirements for Fuse
- 2-1.10 Reports in Chasers and Ground Spinners
- 2-1.11 Flaming Balls and Glowing Flagments
- 2-1.12 Performance for Ground Spinners
- 2-1.13 Performance for Chasers
- 2-1.14 Name or Graphics Inconsistent with Labeling

Chapter 3 LABELING

3-1 General Requirements

3-2 Product-Specific Labeling

Chapter 4 SHIPPING

4-1 General Requirements

© 2009 American Fireworks Standards Laboratory. All Right Reserved.

STANDARD FOR GROUND SPINNERS AND CHASERS

Chapter 1 GENERAL

1-1 INTRODUCTION

1-1.1 This Standard applies to the manufacture of the category of items designed to operate on the ground by spinning motion or by random movement. Ground Spinners generally produce a shower of colored sparks while spinning. Chasers frequently produce whistles and reports while moving randomly on the ground.

1-1.2 This Standard applies to devices intended primarily for use by the general public.

1-1.3 This Standard enables manufacturers to produce fireworks devices in accordance with applicable United States requirements for labeling, composition, and performance.

1-1.4 This Standard excludes items that are defined as “Specialty Items” in Section 1-2.10 of the Standard for Specialty Items.

1-2 DEFINITIONS

1-2.1 Blowout - The unintended release of a pressure effect from other than the intended orfiice of the device.

1-2.2 Burnout - The unintended escape of flame through the wall of a pyrotechnic chamber during functioning of a fireworks device.

1-2.3 Chaser - A variety of fireworks designed to move erratically along the ground with a whistling effect.

1-2.4 Chemical Composition - All pyrotechnic and explosive composition contained in a fireworks device (see also "Pyrotechnic Composition" and "Explosive" definitions).

1-2.5 Pyrotechnic Composition - A chemical mixture that, on burning and without explosion, produces visible displays, bright lights, whistles or motion.

1-2.6 Explosive Composition - Any chemical compound or mixture, the primary purpose of which is to function by explosion, producing an audible effect in a fireworks device.

1-2.7 Plug - The non-flammable material pressed or otherwise firmly affixed to the pyrotechnic chamber of certain fireworks items intended to prevent failure of the assembly in a hazardous manner.

1-2.8 Safety Fuse - A fuse consisting of a thread-wrapped powder train that has been coated with lacquer sufficient to prevent side ignition when tested in accordance with the AFSL test procedure for side ignition resistance.

1-2.9 Side Ignition - The ignition of a fuse at other than the tip when the side of the fuse is placed in direct contact with the glowing end of a burning cigarette.

© 2009 American Fireworks Standards Laboratory. All Right Reserved.

1-2.10 Whistle - A small-tube device that produces a shrill noise resulting from the burning of pyrotechnic composition.

Chapter 2 PRODUCT DESIGN

2-1 General Requirements

2-1.1 The construction of the item must be of such composition and design that no sharp fragments are produced upon functioning (or malfunctioning).

2-1.2 The finished item must not be impact sensitive or have a risk of premature ignition or explosion during transportation, handling, or normal operation.

2-1.3 The finished item must not be designed or packaged in such a manner that it could be confused with candy or other foods if it is of a size or configuration that could be ingested.

2-1.4 The construction of the item must be adequate to prevent leakage of the chemical composition at any time.

2-1.5 The chemical composition of the item must not contain prohibited chemicals except as trace impurities.

NOTE: Prohibited and permitted chemicals are listed in **Appendix A**.

2-1.6 Ground Spinners and Chasers must be assembled so as to prevent damage during transportation, handling, and normal operation.

2-1.7 The pyrotechnic chamber in fireworks devices subject to this Standard must be constructed in a manner that allows functioning in a normal manner without burnout or blowout.

2-1.8 Limits for Chemical Composition Content

2-1.8.1 Ground Spinners and Chasers must not contain more than 20 grams (0.7 ounces) total of chemical composition per pack or string.

2-1.8.2 Explosive components of Ground Spinners and Chasers must not contain more than 50 milligrams of explosive composition per report.

2-1.9 Requirements for Fuse

2-1.9.1 The fuse used as the lead into the body of the item must be only safety fuse or other fuse that has been protected to resist side ignition.

2-1.9.2 The fuse burning time from ignition of the tip of the fuse to ignition of the device must be at least 4 seconds but not more than 8 seconds.

2-1.9.3 Exposed fuse must resist side ignition for at least 3 seconds.

NOTE: Items such as Ground Spinners that require a restricted orifice for proper functioning and contain less than 6 grams of chemical composition per unit do not require a fuse that is resistant to side ignition.

2-1.9.4 The entire fuse must be securely attached to the item so that it will support either the weight of the item plus 227 grams (8 ounces) or double the weight of the item, whichever is less, without separation from the item.

© 2009 American Fireworks Standards Laboratory. All Right Reserved.

2-1.9.5 For multi-effect or multi-tube items, the timing between effects (or tubes) must not exceed 10 seconds.

2-1.9.6 The location of the fuse must be obvious or must be clearly identified on the exterior of the items.

2-1.9.7 Fireworks devices subject to this Standard must have covered fuses that sucessfully resist ignition from open flames, hot surfaces and incendiary sparks when tested in accordance with test procedures found in PYR1129 – 2013 edition and any additional requirements specified by AFSL.

2-1.10 Report(s), if present must perform at ground level, at or below 0.5 meters (1.6 feet.)

2-1.11 Items meeting this Standard must not project flaming balls or glowing fragments.

NOTE: Uniform showers of sparks are not considered to be flaming effects.

2-1.12 Performance for Ground Spinners

2-1.12.1 Ground Spinners must not rise more than l meter (3.3 feet) into the air during functioning.

2-1.12.2 Ground Spinners must function within an area not exceeding 10 meters (33 feet) in diameter.

2-1.13 Performance for Chasers

2-1.13.1 Chasers must not travel more than 10 meters in any direction from the point of igintion and must not rise more than 0.5 meters (1.6 feet) during functioning.

2-1.14 Items subject to this Standard must not bear a name or bear graphics suggesting a use of the product that is inconsistent with the cautionary labeling instructions.

Chapter 3 LABELING

3-1 GENERAL REQUIREMENTS

3-1.1 Individual items must bear cautionary labeling giving a signal word, statement of hazard(s), and instructions for proper use.

3-1.2 All cautionary labeling must be located prominently and in the English language in conspicuous and legible type in contrast by typography, layout or color with any other printed or graphic matter on the label.

NOTE: See **Appendix B** for specific details regarding placement, conspicuousness, prominence, and minimum type size requirements for cautionary labels.

3-1.3 The name and place of business of the manufacturer, distributor, packer, or seller must appear on the label of each product.

3-1.4 The common or usual name of the product, such as "Consumer Fireworks UN0336" or "Consumer Fireworks 1.4G," must appear on the label of each product.

3-2 PRODUCT SPECIFIC LABELING

3-2.1 Ground Spinners without Report (Classification 14)

© 2009 American Fireworks Standards Laboratory. All Right Reserved.

CAUTION
SPINS ON GROUND
EMITS FLAME AND SPARKS

USE ONLY UNDER CLOSE ADULT SUPERVISION.
FOR OUTDOOR USE ONLY.
PLACE ON HARD FLAT SURFACE.
DO NOT HOLD IN HAND.
LIGHT FUSE AND GET AWAY.

3-2.2 Ground Spinners with Report

WARNING
EXPOLOSIVE
SPINS ON GROUND
EMITS FLAME AND SPARKS

USE ONLY UNDER CLOSE ADULT SUPERVISION.
FOR OUTDOOR USE ONLY.
PLACE PACK ON HARD FLAT SURFACE.
DO NOT HOLD IN HAND OR THROW DEVICES.
LIGHT FUSE AND GET AWAY.
NEVER ATTEMPT TO RELIGHT A FUSE.
NEVER ATTEMPT TO LIGHT DEVICE IN A CLOSED CONTAINER.
NEVER CARRY DEVICES IN CLOTHING.

3-2.3 Chasers with Report
(Classification 48)

WARNING
FLAMMABLE
EXPLODES

USE ONLY UNDER CLOSE ADULT SUPERVISION.
FOR OUTDOOR USE ONLY.
PLACE ON HARD FLAT SURFACE.
DO NOT HOLD IN HAND.
LIGHT FUSE AND GET AWAY.

3-2.4 Chasers without Report

CAUTION
FLAMMABLE

USE ONLY UNDER CLOSE ADULT SUPERVISION.
FOR OUTDOOR USE ONLY.
PLACE ON HARD FLAT SURFACE.
DO NOT HOLD IN HAND.
LIGHT FUSE AND GET AWAY.

Chapter 4 SHIPPING

4-1 GENERAL REQUIREMENTS

4-1.1 All consumer fireworks imported into the United States must comply with certain regulations promulgated by the United States Department of Transportation. These regulations govern approval of fireworks for shipment, construction and testing of their shipping containers, and the marking and labeling of the containers.

NOTE: See **Appendix C** for a summary of these requirements. However, **Appendix C** is only a summary and not a complete discussion. Title 49 of the United States Code should be consulted for complete information.

4-1.2 Product design, packaging, and case packing must produce a finished shipping case in which simultaneous explosion of all the items does not result from ignition of one item in the shipping case.

4-1.3 The package must not be so difficult to open that the contents might be damaged as a result of opening.

4-1.4 These items must be securely packaged for shipping in such a way that they are protected from moisture or physical damage during transportation and so that there is no risk of any of the contents escaping from the shipping case.

© 2009 American Fireworks Standards Laboratory. All Right Reserved.

AFSL 106

STANDARD FOR SPECIALTY ITEMS

OCTOBER 2017 EDITION

THIS STANDARD INCLUDES SPECIFICATIONS FOR THE FOLLOWING PRODUCTS:

Classification 26 - Specialty Items

© 2009 American Fireworks Standards Laboratory. All Right Reserved.

TABLE OF CONTENTS

Chapter 1 GENERAL

1-1 Introduction

1-2 Definitions

Chapter 2 PRODUCT DESIGN

2-1 General Requirements
- 2-1.1 Sharp Fragments
- 2-1.2 Impact Sensitivity
- 2-1.3 Similarity to Candy or Other Foods
- 2-1.4 Pyrotechnic Leakage
- 2-1.5 Prohibited Chemicals
- 2-1.6 Assembly of Items
- 2-1.7 Burnout and Blowout
- 2-1.8 Limits of Chemical Composition
- 2-1.9 Limits of Explosive Composition
- 2-1.10 Requirements for Fuse
- 2-1.11 Performance
- 2-1.12 Names and Graphics Inconsistent with Labeling

2-2 Requirements for Base Items

Chapter 3 LABELING

3-1 General Requirements

3-2 Product-Specific Labeling

Chapter 4 SHIPPING

4-1 General Requirements

© 2009 American Fireworks Standards Laboratory. All Right Reserved.

STANDARD FOR SPECIALTY ITEMS

Chapter 1 GENERAL

1-1 INTRODUCTION

1-1.1 This Standard applies to the manufacture of small items that contain relatively small amounts of chemical composition and which are designed to produce limited visual, audible or motion effects.

NOTE: Items that consist of significantly different effects (such as showers of sparks and aerial effects) will be considered under the AFSL Standard for Combination Items.

1-1.2 This Standard applies to devices intended primarily for use by the general public.

1-1.3 This Standard enables manufacturers to produce fireworks devices in accordance with applicable United States requirements for labeling, composition, and performance.

1-2 DEFINITIONS

1-2.1 Base - The platform to which one or more tubes of a fireworks device are attached to provide a stable platform for functioning of the item.

1-2.2 Blowout - The release of a pressure effect from other than the intended orifice of a fireworks device.

1-2.3 Burnout - The unintended escape of flame through the wall of a pyrotechnic chamber during functioning of a fireworks device.

1-2.4 Chemical Composition - All pyrotechnic and explosive composition contained in a fireworks device (see also "Pyrotechnic Composition" and "Explosive Composition" definitions).

1-2.5 Explosive Composition - Any chemical compound or mixture, the primary purpose of which is to function by explosion, producing an audible effect in a fireworks device.

NOTE: The lift charge of an item subject to an AFSL Standard is not considered to be explosive composition.

1-2.6 Pyrotechnic Composition - A chemical mixture that, on burning and without explosion, produces visible displays, bright lights, whistles, or motion.

1-2.7 Safety Fuse - A fuse consisting of a thread-wrapped powder train that has been coated with lacquer sufficient to prevent side ignition when tested in accordance with the AFSL test procedure for side ignition resistance.

1-2.8 Side Ignition - The ignition of a fuse at a point other than at the tip when the side of the fuse is placed in direct contact with the glowing tip on a lighted cigarette.

1-2.9 Specialty Item - A fireworks item that resembles in physical shape and form

© 2009 American Fireworks Standards Laboratory. All Right Reserved.

articles commonly recognized as appealing to children. This includes, but is not limited to, devices that resemble cartoon characters, toys, vehicles, boats, and animals and that are designed to produce limited visible, audible, or motion effects.

NOTE: Items having multiple effects that are not considered appealing to or intended for use by children may be tested as another AFSL category such as Combinations, etc.

1-2.10 Whistle - A small-tube device that produces a shrill noise resulting from the burning of pyrotechnic composition.

Chapter 2 PRODUCT DESIGN

2-1- GENERAL REQUIREMENTS

2-1.1 The construction of the item must be of such composition and design that no sharp fragments are produced upon functioning (or malfunctioning).

2-1.2 The finished item must not be impact sensitive or have a risk of premature ignition or explosion during transportation, handling, or normal operation.

2-1.3 The finished item must not be designed or packaged in such a manner that it could be confused with candy or other foods if it is of a size or configuration that could be ingested.

2-1.4 The construction of the item must be adequate to prevent leakage or loss of the chemical composition at any time.

2-1.5 The chemical composition of the item must not contain prohibited chemicals except as trace impurities.

NOTE: Prohibited and permitted chemicals are listed in **Appendix A**.

2-1.6 Items subject to this Standard must be assembled and packaged so as to prevent damage to the items during transportation, handling, and normal operation.

2-1.7 The pyrotechnic chamber of a fireworks device subject to this Standard must be constructed in a manner to allow functioning in a normal manner without burnout or blowout.

2-1.8 Limits for Chemical Composition Content

2-1.8.1 Specialty Items must not contain more than 20 grams (0.7 ounces) of total chemical composition.

2-1.8.2 Total chemical composition per individual tube of an item subject to this Standard must not exceed 2 grams (0.07 ounces).

2-1.9 Explosive components of any item subject to this Standard must not contain more than 50 milligrams of chemical composition per report.

2-1.10 Requirements for Fuse

2-1.10.1 The fuse used as the lead into the body of the item must be only safety fuse or other fuse that has been protected to resist side ignition.

2-1.10.2 Exposed fuse must resist side ignition for at least 3 seconds.

© 2009 American Fireworks Standards Laboratory. All Right Reserved.

NOTE: Items that require a restricted orifice for proper functioning and contain less than 6 grams (0.2 ounces) of pyrotechnic composition do not require a fuse that is resistant to side ignition.

2-1.10.3 The fuse burning time from ignition of the tip of the fuse to ignition of the device must be at least 4 seconds but not more than 8 seconds.

2-1.10.4 The entire fuse must be securely attached to the item so that it will support either the weight of the item plus 227 grams (8 ounces), or double the weight of the item, whichever is less, without separation from the item.

2-1.10.5 For multi-effect or multi-tube items, timing between effects (or tubes) must not exceed 5 seconds.

NOTE: Multiple tube items subject to this standard are not required to be fused so that the tubes fire sequentially.

2-1.10.6 The location of the fuse must be obvious or be clearly identified on the exterior packaging of the item.

2-1.10.7 Fireworks devices subject to this Standard must have covered fuses that sucessfully resist ignition from open flames, hot surfaces and incendiary sparks when tested in accordance with test procedures found in PYR1129 – 2013 edition and any additional requirements specified by AFSL.

2-1.11 Performance

2-1.11.1 Effect propelled from a Specialty Item must not travel an initial distance in the air greater than 2 meters in any direction.

2-1.11.2 The item must not catch fire as a result of operation.

2-1.12 Items subject to this Standard must not bear a name or bear graphics suggesting a use of the product that is inconsistent with the cautionay labeling instructions.

2-2 SPECIFIC REQUIREMENTS FOR BASE ITEMS

2-2.1 The base or bottom of devices that are operated in a standing or upright position must have the minimum horizontal dimension or the diameter of the base equal to at least one-third of the height of the device including any base or cap affixed thereto, but excluding any protruding fuse.

2-2.2 In addition, any item designed to operate on a base must remain upright when tilted 12 degrees from horizontal against its shortest base dimension.

Chapter 3 LABELING

3-1 GENERAL REQUIREMENTS

3-1.1 Individual items must bear cautionary labeling giving a signal word, statement of hazard(s), and instructions for proper use.

3-1.2 All cautionary labeling must be located prominently and in the English language in conspicuous and legible type in contrast by typography, layout or color with any other printed or graphic matter on the label.

© 2009 American Fireworks Standards Laboratory. All Right Reserved.

3-1.3 The name and place of business of the manufacturer, packer, distributor, or seller must appear on the label of each product.

NOTE: See **Appendix B** for specific details regarding placement, conspicuousness, prominence, and minimum type size requirements for cautionary labels.

3-1.4 The common or usual name of the product must appear on the label of each product. For snakes or glow worms that are exempt from classification as explosives (See **Appendix C II**), the common or usual name must be: "Snakes" for snakes, "Glow Worms" for glow worms. For snakes and glow worms that are not exempt from classification as explosives and all other items subject to this Standard, the common or usual name must be "Consumer Fireworks UN0336" or "Consumer Fireworks 1.4G."

3-2 PRODUCT-SPECIFIC LABELING

3-2.1 Boat-Like Devices Designed to Operate on Water

CAUTION
EMITS SHOWERS OF SPARKS

USE ONLY UNDER CLOSE ADULT SUPERVISION.
FOR OUTDOOR USE ONLY.
PLACE BOAT ON WATER.
DO NOT HOLD IN HAND.
LIGHT FUSE AND GET AWAY.

3-2.2 Gun Ships, Aircraft Carriers, and Similar Devices that Operate on the Ground and Shoot Helicopters into Air

WARNING
EMITS SHOWERS OF SPARKS
SHOOTS UPWARD

USE ONLY UNDER CLOSE ADULT SUPERVISION.
FOR OUTDOOR USE ONLY.
PLACE ON HARD LEVEL SURFACE.
DO NOT HOLD IN HAND.
LIGHT FUSE AND GET AWAY.

3-2.3 Tanks, Cars, Motorcycles And Similar Devices that Shoot Reports, Flaming Pellets, Etc.

CAUTION
MOVES ON GROUND
EMITS FLAME AND SPARKS
(or: WARNING
SHOOTS FLAMING PELLETS AND REPORTS if applicable)

USE ONLY UNDER CLOSE ADULT SUPERVISION.
FOR OUTDOOR USE ONLY.
DO NOT HOLD IN HAND.
PLACE ON HARD LEVEL SURFACE.
LIGHT FUSE AND GET AWAY.

3-2.4 Strobes

CAUTION
FLAMMABLE
EMITS FLASHES OF LIGHT

USE ONLY UNDER CLOSE ADULT SUPERVISION.
FOR OUTDOOR USE ONLY.
DO NOT HOLD IN HAND.
PLACE ON HARD, LEVEL SURFACE.
LIGHT FUSE AND GET AWAY.

3-2.5 Aerial and explosive devices must bear the signal word "WARNING" rather than "CAUTION."

3-2.6 Crackling Ball

© 2009 American Fireworks Standards Laboratory. All Right Reserved.

CAUTION
EMITS CRACKLING SPARKS

USE ONLY UNDER CLOSE ADULT SUPERVISION.
FOR OUTDOOR USE ONLY.
DO NOT HOLD IN HAND.
LAY ON GROUND.
LIGHT FUSE AND GET AWAY.

3-2.7 Cars with Whistle

CAUTION
MOVES ON GROUND
EMITS WHISTLE, FLAME, AND SPARKS

USE ONLY UNDER CLOSE ADULT SUPERVISION.
FOR OUTDOOR USE ONLY.
PLACE ON HARD, LEVEL SURFACE.
DO NOT HOLD IN HAND.
LIGHT FUSE AND GET AWAY.

3-2.8 Sparkling Tree

CAUTION
EMITS SHOWERS OF SPARKS

USE ONLY UNDER CLOSE ADULT SUPERVISION.
FOR OUTDOOR USE ONLY.
PLACE ON LEVEL SURFACE.
DO NOT HOLD IN HAND.
DO NOT TOUCH GLOWING WIRE.
LIGHT TIP AND GET AWAY.
AFTER USE PLACE DEVICE IN WATER.

NOTE: The preceding labels are applicable for some common Specialty Items. Labeling for other Specialty Items will be different, depending on the function of the device. For advice on labeling for devices not covered above, contact the AFSL office.

Chapter 4 SHIPPING

4-1 General Requirements

4-1.1 All consumer fireworks imported into the United States must comply with certain regulations promulgated by the United States Department of Transportation. These regulations govern approval of fireworks for shipment, construction and testing of their shipping containers, and the marking and labeling of the containers.

NOTE: See **Appendix C** for a summary of these requirements. However, **Appendix C** is only a summary and not a complete discussion. Title 49 of the United States Code should be consulted for complete information.

4-1.2 Product design, packaging, and case packing must produce a finished shipping case in which simultaneous explosion of all the items does not result from ignition of one item in the shipping case.

4-1.3 The package must not be so difficult to open that the contents might be damaged as a result of opening.

4-1.4 These items must be securely packaged for shipping in such a way that they are protected from moisture and physical damage during transportation and so that there is no risk of any of the contents escaping from the shipping case.

© 2009 American Fireworks Standards Laboratory. All Right Reserved.

AFSL 107

STANDARD FOR PARTY, TRICK, AND TOY SMOKE DEVICES

OCTOBER 2017 EDITION

THIS STANDARD INCLUDES SPECIFICATIONS FOR THE FOLLOWING PRODUCTS:

Classification 30 - Snakes

Classification 31 - Snappers

Classification 33 - Booby Traps

Classification 34 - Party Poppers

Classification 42 - Toy Smoke Devices

© 2009 American Fireworks Standards Laboratory. All Right Reserved.

TABLE OF CONTENTS

Chapter 1 GENERAL

1-1 Introduction

1-2 Definitions

Chapter 2 PRODUCT DESIGN

2-1 General Requirements
- 2-1.1 Sharp Fragments
- 2-1.2 Impact Sensitivity
- 2-1.3 Similarity to Candy or Other Foods
- 2-1.4 Pyrotechnic Leakage
- 2-1.5 Prohibited Chemicals
- 2-1.6 Assembly of Items
- 2-1.7 Burnout and Blowout
- 2-1.8 Limits for Chemical Composition
- 2-1.9 Requirements for Fuse
- 2-1.10 Limits of Effects
- 2-1.11 Flaming Debris
- 2-1.12 Resemblance to Certain Banned Items
- 2-1.13 Names and Graphics inconsistent with Labeling

2-2 Specific Requirements for Toy Smoke Devices

2-3 Specific Requirements for Party Poppers

2-4 Specific Requirements for Base Items

2-5 Specific Packaging Requirements for Items Exempt from Classification as Explosives

Chapter 3 LABELING

3-1 General Requirements

3-2 Product-Specific Labeling

Chapter 4 SHIPPING

4-1 General Requirements

© 2009 American Fireworks Standards Laboratory. All Right Reserved.

STANDARD FOR PARTY, TRICK, AND TOY SMOKE DEVICES

Chapter 1 GENERAL

1-1 INTRODUCTION

1-1.1 This Standard applies to the manufacture of the category of small items frequently used as party items. The unit of sale usually consists of a number of individual items boxed or packaged as a unit.

1-1.2 This Standard applies to devices intended primarily for use by the general public.

1-1.3 This Standard enables manufacturers to produce fireworks devices in accordance with applicable United States requirements for labeling, composition, and performance.

1-1.4 This Standard excludes items that are defined as “Specialty Items” in Section 1-2.10 of the Standard for Specialty Items.

1-2 DEFINITIONS

1-2.1 Blowout - The unintended release of a pressure effect from other than the intended orifice of the device.

1-2.2 Booby Trap - A small plastic or paper item containing a small amount of friction sensitive chemical composition. String protruding from both ends of the device is pulled to ignite it.

1-2.3 Burnout - The unintended escape of flame through the wall of a pyrotechnic chamber during functioning of a fireworks device.

1-2.4 Chemical Composition - All pyrotechnic and explosive composition contained in a fireworks device (see also "Pyrotechnic Composition" and "Explosive Combination" definitions).

1-2.5 Explosive Composition - Any chemical compound or mixture, the primary purpose of which is to function by explosion, producing an audible effect in a fireworks device.

1-2.6 First Fire - The initial burst of flame that results from the ignition of pyrotechnic material used as a primer for the internal smoke composition. First fire appears after ignition of the primary fuse and before the generation of smoke.

1-2.7 Party Popper - Small plastic or paper item containing a small amount of chemical composition that is friction sensitive. A string or trigger protruding from the device is usually pulled to ignite it, producing a small report and a shower of paper and/or cloth novelties.

1-2.8 Pyrotechnic Composition - A chemical mixture that, on burning and without explosion, produces visible or brilliant displays, bright lights, whistles, or motion.

1-2.9 Safety Fuse - A fuse consisting of a thread-wrapped powder train that has been coated with lacquer sufficient to prevent side ignition when tested in accordance with the AFSL test procedure for side ignition resistance.

© 2009 American Fireworks Standards Laboratory. All Right Reserved.

1-2.10 Side Ignition - The ignition of a fuse at other than the tip when the side of the fuse is placed in direct contact with the glowing end of a burning cigarette.

1-2.11 Snapper – A paper or plastic wrapped device containing not more than 1.0 mg of silver fulminate coated on small bits of sand or gravel. When dropped the device explodes, producing a small report.

NOTE: Snappers that are wrapped in other than paper wrapping or devices containing chemical composition other than silver fulminate require an EX approval under 49CFR 173.56B.

1-2.12 Whistle - A small-tube device that produces a shrill noise resulting from the burning of pyrotechnic composition.

Chapter 2 PRODUCT DESIGN

2-1 GENERAL REQUIREMENTS

2-1.1 The construction of the item must be of such composition and design that no sharp fragments are produced upon functioning (or malfunctioning).

2-1.2 The finished items must not be impact sensitive or have a risk of premature ignition or explosion during transportation and handling and normal operation.

NOTE: The requirement that items must not be impact sensitive during normal operation does not apply to snappers.

2-1.3 The finished item must not be designed or packaged in such a manner that it could be confused with candy or other foods if it is of a size or configuration that could be ingested.

2-1.4 The construction of the item must be adequate to prevent leakage of the chemical composition at any time.

2-1.5 The chemical composition of the item must not contain prohibited chemical except as trace impurities.

NOTE: Prohibited and permitted chemical are listed in **Appendix A.**

2-1.6 Items subject to this Standard must be assembled and packaged so as to prevent damage to the items during transportation, handling, and normal operation.

2-1.7 The pyrotechnic chamber of items subject to this Standard must be constructed so as to allow functioning in a normal manner without burnout or blowout.

2-1.8 Limits for Chemical Composition Content.

2-1.8.1 Party poppers must not contain more than 16 milligrams total of chemical composition per unit.

NOTE: For Party Poppers not regulated as an explosive for transportation purposes (see **Appendix C, II**), the chemical composition is limited to potassium chlorate and red phosphorous.

2-1.8.2 Booby traps must not contain more than 16 milligrams of chemical composition per unit.

2-1.8.3 Booby traps must be packaged in a package meeting all requirements

© 2009 American Fireworks Standards Laboratory. All Right Reserved.

for retail sale that contains not more than 12 units.

2-1.8.4 Snappers must be made of silver fulminate coated on small bits of sand or gravel only.

NOTE: Devices containing chemical composition other than silver fulminate require an EX approval under 49 CFR 173.56B.

2-1.8.5 Snappers must not contain more than 1.0 mg. of chemical composition per unit.

2-1.8.6 Snappers must be in inner packages not to exceed 50 devices each with sawdust or other impact absorbing material.

2-1.8.7 Toy Smoke Devices must not contain more than 100 grams (3.6 ounces) of chemical composition per unit.

NOTE: For Smoke Devices not regulated as an explosive for transportation purposes (See **Appendix C, II**), the chemical composition is limited to 5 grams and must be packaged in a cork or cardboard casing. The chemical composition is limited to potassium nitrate and sulphur for white smoke and combinations of potassium chlorate, sulphur, sugar, and organic dyes for colored smoke. All units containing potassium chlorates must also contain an equal amount of a bicarbonate, such as sodium bicarbonate.

2-1.8.8 Snakes (and glow worms) must not contain more than 2 grams of chemical composition per unit.

NOTE: For snakes (and glow worms) not regulated as an explosive for transportaton purposes (See **Appendix C, II**), the chemical composition is limited to ammonium perchlorate, nitrated pitch, asphaltum, and carbonaceous materials.

2-1.9 Requirements for Fuse

2-1.9.1 The fuse used as the lead into the body of the item must be only safety fuse or other fuse that has been protected to resist side ignition.

NOTE: Items requiring a restricted orifice for proper functioning and that contain less than 6 grams (0.23 ounces) of pyrotechnic composition do not require a fuse that is resistant to side ignition.

2-1.9.2 The fuse burning time from ignition of the tip of the fuse to ignition of the device must be at least 4 seconds but not more than 8 seconds.

2-1.9.3 Exposed fuses must resist side ignition for at least 3 seconds.

2-1.9.4 The entire fuse must be securely attached to the item so that it will support either the weight of the item plus 227 grams (8 ounces) or double the weight of the item, whichever is less, without separation from the item.

2-1.9.5 For multi-effect or multi-tube items, the timing between effects (or tubes) must not exceed 10 seconds.

2-1.9.6 The location of the fuse must be obvious or be clearly identified on the exterior of the device.

2-1.9.7 Fireworks devices subject to this Standard must have covered fuses that sucessfully resist ignition from open flames, hot surfaces and incendiary sparks

© 2009 American Fireworks Standards Laboratory. All Right Reserved.

when tested in accordance with test procedures found in PYR1129 – 2013 edition and any additional requirements specified by AFSL

2-1.10 Items meeting this Standard must produce only visual and audible effects.

2-1.11 Items meeting this Standard must not produce flaming debris.

2-1.12 Items subject to this Standard must not have the shape and color or bear a name that resembles banned hazardous fireworks, such as M-80 Salutes, Silver Salutes, Cherry Bombs, etc.

NOTE: Use of such names in conjunction with the word "brand" and the name of the classification, where all components of the name (i.e., name, brand, and classification) are prominent, is acceptable under this Standard.

2-1.13 Items subject to this Standard must not bear a name or bear graphics suggesting a use of the product that is inconsistent with the cautionary labeling instructions.

2-2 SPECIFIC REQUIREMENTS FOR TOY SMOKE DEVICES

2-2.1 Toy Smoke Devices must not have plastic components in contact with their pyrotechnic composition.

2-2.2 Toy Smoke Devices must be constructed so that they will neither burst nor produce external flame upon ignition.

NOTE 1: Burning fuse and first fire upon ignition are not considered to be external flame.

NOTE 2: Small brief or mild bursts of flame accompanying smoke production may not exceed 25% of the total smoke production time of the device.

2-2.3 First fire in Toy Smoke Devices must not exceed 25% of the total operating time.

2-2.4 Items subject to this Standard must produce a uniformly fine effect with no slag or other molten particles that are large enough to have the potential to cause burns.

2-3 SPECIFIC REQUIREMENTS FOR PARTY POPPERS

2-3.1 Inserts in Party Poppers must consist only of soft paper or cloth.

2-3.2 Inserts in Party Poppers must not be capable of ignition during normal operation of the item and must resist ignition after operation.

2-4 SPECIFIC REQUIREMENTS FOR BASE ITEMS

2-4.1 The base or bottom of devices that are operated in a standing or upright position must have the minimum horizontal dimension or the diameter of the base equal to at least one-third of the height of the device including any base or cap affixed thereto but excluding any protruding fuse.

2-4.2 In addition, any item designed to operate on a base must remain upright when tilted 12 degrees from horizontal against its shortest base dimension.

© 2009 American Fireworks Standards Laboratory. All Right Reserved.

2-5 SPECIFIC PACKAGING REQUIREMENTS FOR ITEMS NOT REGULATED AS AN EXPLOSIVE FOR TRANSPORTATION PURPOSES (SEE **APPENDIX C II**)

2-5.1 Party Poppers not regulated as an explosive for transportation purposes must be packaged in an inner packaging that contains not more than 72 devices.

2-5.2 Smoke Devices not regulated as an explosive for transportation purposes must be packaged in an inner packaging that contains no more than 72 devices.

2-5.3 Snakes (and glow worms) must be packaged in an inner packaging that contains no more than 25 devices.

Chapter 3 LABELING

3-1 GENERAL REQUIREMENTS

3-1.1 Individual items must bear cautionary labeling giving a signal word, statement of hazard(s), and instructions for proper use.

3-1.2 All cautionary labeling must be located prominently and in the English language in conspicuous and legible type in contrast by typography, layout or color with any other printed or graphic matter on the label.

NOTE: See **Appendix B** for specific details regarding placement, conspicuousness, prominence, and minimum type size requirements for cautionary labels.

3-1.3 The name and place of the manufacturer, packer, distributor, or seller must appear on the label of the product.

3-1.4 The common or usual name of the product must appear on the label of each product. For Smoke Devices, Party Poppers, and Snappers that are exempt from classification as explosives (See **Appendix C II**), the common or usual name must be: "Smoke Devices" for Smoke Devices, "Party Poppers" for Party Poppers, and "Snappers" for Snappers. For all other Smoke Devices, Party Poppers, and Snappers, the common or usual name must be "Consumer Fireworks UN0336" or "Consumer Fireworks 1.4G."

3-2 PRODUCT-SPECIFIC LABELING

3-2.1 Party Poppers - Bottle Type (Classification 33)

CAUTION
FLAMMABLE

USE ONLY UNDER CLOSE ADULT SUPERVISION.
DO NOT POINT EITHER END TOWARD FACE OR OTHER PERSON.
HOLD IN HAND, JERK STRING

3-2.2 Party Poppers – Pistol Type (Classification 34)

CAUTION
FLAMMABLE

USE ONLY UNDER CLOSE ADULT SUPERVISION.
DO NOT POINT EITHER END TOWARD FACE OR OTHER PERSON.
HOLD IN HAND - PULL TRIGGER SHARPLY.

© 2009 American Fireworks Standards Laboratory. All Right Reserved.

3-2.3 Snappers (Classification 31)

CAUTION

USE ONLY UNDER CLOSE ADULT SUPERVISION.
FOR OUTDOOR USE ONLY.
DO NOT PUT IN MOUTH.
THROW ON GROUND.

3-2.4 Booby Traps (Classification 33A)

CAUTION
FLAMMABLE
EXPLODES WHEN STRINGS ARE PULLED

USE ONLY UNDER CLOSE ADULT SUPERVISION.
DO NOT HOLD CLOSE TO FACE.
HOLD IN HAND, JERK ENDS OF STRING.

3-2.5 Snakes (Classification 30)

CAUTION
FLAMMABLE

USE ONLY UNDER CLOSE ADULT SUPERVISION.
FOR OUTDOOR USE ONLY
DO NOT PUT IN MOUTH
PLACE ON GROUND
LIGHT PELLET.

3-2.6 Smoke Balls, Toy Smoke, and Flitter Devices (Classification 42)

CAUTION
FLAMMABLE

USE ONLY UNDER CLOSE ADULT SUPERVISION.
FOR OUTDOOR USE ONLY.
DO NOT HOLD IN HAND.
PLACE ON GROUND.
LIGHT FUSE AND GET AWAY.

3-2.7 Canister-Type Smoke Devices with Pull String

CAUTION
FLAMMABLE

USE ONLY UNDER CLOSE ADULT SUPERVISION.
GRASP FIRMLY IN HAND AT BASE OF TUBE.
POINT AWAY FROM PEOPLE OR FLAMMABLE MATERIAL.
PULL STRING SHARPLY.
PLACE ON GROUND AND GET AWAY.

Chapter 4 SHIPPING

4-1 GENERAL REQUIREMENTS

4-1.1 All consumer fireworks must comply with certain regulations promulgated by the United States Department of Transportation. These regulations govern approval of fireworks for shipment, construction and testing of their shipping containers, and the marking and labeling of the containers.

NOTE: See **Appendix C** for a summary of these requirements. However, **Appendix C** is only a summary and not a complete discussion. Title 49 of the United States Code should be consulted for complete information.

4-1.2 Product design, packaging, and case packing must produce a finished shipping case in which simultaneous explosion of all the items does not result from ignition of one item in the shipping case.

4-1.3 The package must not be so difficult to open that the contents might be damaged as a result of opening.

© 2009 American Fireworks Standards Laboratory. All Right Reserved.

4-1.4 These items must be securely packaged for shipping in such a way that they are protected from moisture or physical damage during transportation and so that there is no risk of any of the contents escaping from the shipping case.

© 2009 American Fireworks Standards Laboratory. All Right Reserved.

AFSL 108

STANDARD FOR RELOADABLE TUBE AERIAL SHELLS

OCTOBER 2017 VERSION

THIS STANDARD INCLUDES SPECIFICATIONS FOR THE FOLLOWING PRODUCTS:

Classification 22 - Reloadable Aerial Shells

© 2009 American Fireworks Standards Laboratory. All Right Reserved.

TABLE OF CONTENTS

Chapter 1 GENERAL

1-1 Introduction

1-2 Definitions

Chapter 2 PRODUCT DESIGN

2-1 General Requirements
- 2-1.1 Sharp Fragments
- 2-1.2 Impact Sensitivity
- 2-1.3 Similarity to Candy or Othe Foods
- 2-1.4 Pyrotechnic Leakage
- 2-1.5 Prohibited Chemicals
- 2-1.6 Assembly of Items
- 2-1.7 Limits of Chemical Composition
- 2-1.8 Launcher Tubes
- 2-1.9 Bases
- 2-1.10 Requirements for Fuse
- 2-1.11 Requirements for Shells
- 2-1.12 Streamers Requirement
- 2-1.13 Requirements for Shell Design
- 2-1.14 Retail Packaging
- 2-1.15 Name or Graphics Inconsistent with Labeling

2-2 Requirement for Devices with Multiple Launcher Tubes

Chapter 3 PERFORMANCE

3-1 Stability Requirements
- 3-1.1 Tilt Test

3-2 Shells
- 3-2.1 Vertical Trajectory
- 3-2.2 Burst Height
- 3-2.3 Primary Effects - Minimum Height
- 3-2.4 Flaming Debris

© 2009 American Fireworks Standards Laboratory. All Right Reserved.

Chapter 4 LABELING

4-1 General Requirements

4-2 Specific Labeling for Launcher Tubes and Cartons

4-3 Specific Labeling for Individual Shells

4-4 Specific Labeling for Box Inserts

Chapter 5 SHIPPING

5-1 General Requirements

© 2009 American Fireworks Standards Laboratory. All Right Reserved.

STANDARD FOR RELOADABLE TUBE AERIAL SHELLS

Chapter 1 GENERAL

1-1 INTRODUCTION

1-1.1 This Standard applies to the manufacture of a class of Shells designed to fire various visual and audible effects into the air from a reloadable tube. The finished unit consists of an assembled tube and base unit with a number of individually fused Shells, packaged together.

1-1.2 This Standard applies to devices intended primarily for use by the general public.

1-1.3 This Standard enables manufacturers to produce fireworks devices in accordance with applicable United States requirements for labeling, composition, and performance.

1-1.4 This Standard excludes items that are defined as “Specialty Items” in Section 1-2.10 of the Standard for Specialty Items.

1-2 DEFINITIONS

1-2.1 Base - The platform to which one or more tubes of a fireworks device are attached to provide a stable launching platform.

1-2.2 Black Powder - A mixture of potassium nitrate, sulfur, and charcoal intended to produce a pyrotechnic effect.

1-2.3 Black Powder Equivalent - A mixture containing potassium nitrate and non-metallic fuel. The use of any other mixture as a break charge requires empirical test data demonstrating that the mixture is equivalent in performance to black powder.

1-2.4 Blowout - The unintended release of a pressure effect from other than the intended orifice of the device.

1-2.5 Burnout - The unintended escape of flame through the wall of a pyrotechnic chamber during functioning of a fireworks device.

1-2.6 Break Charge - The interior charge which, when ignited by a flame from the timed fuse, breaks apart an Aerial Shell at the top of its climb and ignites the pyrotechnic effect.

1-2.7 Chemical Composition - All pyrotechnic and explosive composition contained in a fireworks device (see also "Pyrotechnic Composition" and "Explosive Composition" definitions).

1-2.8 Explosive Composition - Any chemical compound or mixture, the primary purpose of which is to function by explosion, producing an audible effect in a fireworks device.

NOTE: The lift charge of an item subject to this Standard is not considered to be explosive composition.

1-2.9 Lift Charge (Propellant) – Unpressed granular chemical composition, consisting of black powder or equivalent,

© 2009 American Fireworks Standards Laboratory. All Right Reserved.

which is used to propel one or more visible or audible aerial effects into the air.

1-2.10 Near-Vertical – A maximum deviation of 30 degrees from vertical in the flight trajectory for comet, mines and shells and reloadable tube aerial shell devices.

1-2.11 Primary Effect – A major effect a fireworks device is designed to produce, such as a report in a Firecracker, shower of sparks in a Fountain, an aerial flaming ball for a Shell or Mine, etc. This is distinguished from effects such as an audible whistle, Comet tail, or an audible effect produced as part of the lift function.

1-2.12 Plug - The non-flammable material pressed or otherwise firmly affixed to the bottom of a Shell launcher tube, intended to prevent blowout or failure of the base assembly in a hazardous manner.

1-2.13 Propellant - See "Lift Charge" above.

1-2.14 Pyrotechnic Composition - A chemical mixture that, on burning and without explosion, produces visible displays, bright lights, whistles, or motion.

1-2.15 Report - A loud noise or "bang."

1-2.16 Retail Package – A package suitable for sale as a unit to the public that complies with the requirements of this Standard and that is fully enclosed by cardboard, heavy paper, plastic, or a combination of these materials. When multiple packages of Reloadable Shells are contained in an outer package, each inner package will be treated as a separate retail package and must comply with all of the provisions of this Standard.

1-2.17 Safety Fuse - A fuse consisting of a thread-wrapped powder train that has been coated with lacquer sufficient to prevent side ignition when tested in accordance with the AFSL test procedure for side ignition resistance.

1-2.18 Sequential - Exhibits a clear audible and visual separation of firings between tubes of a multiple-tube device.

1-2.19 Shell - An aerial projectile designed to be propelled into the air by the lift charge (propellant), wherein at the peak of flight, a small bursting charge "breaks" the Shell and creates a display of stars, reports, or other effects.

1-2.20 Side Ignition - The ignition of a fuse at other than the tip when the side of the fuse is placed in direct contact with the glowing end of a burning cigarette.

1-2.21 Simultaneous - Exhibits no clear audible and visual separation of firings between tubes of a multiple-tube device.

1-2.22 Whistle - A small-tube device that produces a shrill noise resulting from the burning of pyrotechnic composition.

Chapter 2 PRODUCT DESIGN

2-1 GENERAL REQUIREMENTS

2-1.1 The construction of the item, including launcher tubes and Shell casings, must be of such composition and design that no sharp fragments are produced upon functioning (or malfunctioning).

© 2009 American Fireworks Standards Laboratory. All Right Reserved.

2-1.2 The finished item must not be impact sensitive or have a risk of premature ignition or explosion during transportation, handling or normal operation.

2-1.3 The finished item must not be designed or packaged in such a manner that it could be confused with candy or other foods if it is of a size or configuration that could be ingested.

2-1.4 The construction of the item must be adequate to prevent leakage of the chemical composition at any time.

2-1.5 The chemical composition of the item must not contain prohibited chemical except as trace impurities.

NOTE: Prohibited and permitted chemicals are listed in **Appendix A**.

2-1.6 The device must be assembled and packaged so as to prevent damage during transportation, handling, and normal operation.

2-1.7 Limits of Chemical Composition

2-1.7.1 Shells must not contain more than 60 grams (2.1 ounces) of total chemical
composition (including reports, break charge, lift charge, and effects) per Shell.

2-1.7.2 The break charge of individual Shells must not consist of more than 25% by weight of the chemical composition of the Shell or 10 grams (0.4 ounces), whichever is less.

2-1.7.3 The maximum quantity of lift charge (propellant) in any Shell must not exceed 20 grams.

2-1.7.4 The lift charge (propellant) must consist of Black Powder or equivalent.

2-1.7.5 Explosive components of Shells intended to produce reports must not contain more than 2 grains (130 mg) of explosive composition per report.

2-1.8 Launcher Tubes

2-1.8.1 The tube intended for launching an aerial effect must be constructed of material that will not produce sharp fragments upon functioning or premature ignition of a Shell in the tube.

2-1.8.2 The launcher tube must be constructed of material that will allow the item to function in a normal manner without burnout or blowout.

2-1.8.3 The launcher tube must be constructed of material that is sufficiently rigid to retain its dimensions during transportation, handling, and normal operation.

2-1.8.4 The launcher tube must be securely attached to the base so as not to separate or come loose during transportation, handling, or normal operation.

2-1.8.5 The launcher tube must be able to withstand at least 2 times the intended number of uses without burnout, blowout, separation from the base, or other malfunction.

2-1.8.6 The launcher tube including its base, packed in a reloadable shell kit must be capable of withstanding the explosion of any individual shell in the kit, without fragmenting, when the shell is inserted in the tube upside down and ignited.

© 2009 American Fireworks Standards Laboratory. All Right Reserved.

2-1.8.7 The launcher tube must bear a special warning label that is securely attached over the top (mouth) of the launcher tube which reads as follows: "⚠DANGER: DO NOT HOLD LAUNCHER TUBE IN HAND OR PLACE AGAINST BODY DURING USE – SERIOUS INJURY OR DEATH COULD RESULT."

NOTE: The special warning label must comply with the requirements specified in **Appendix M**.

2-1.9 Bases

2-1.9.1 Bases must be made of material that will not break or shatter during transportation, handling, or normal operation.

2-1.9.2 Bases must remain firmly attached to the item during transportation, handling, and normal operation.

2-1.9.3 The base or bottom of fireworks devices subject to this Standard must have the minimum horizontal dimensions or the diameter of the base equal to at least one-third of the height of the device including any base but excluding any protruding fuse.

2-1.9.4 The base/tube assembly must not provide a source of ignition during use.

2-1.10 Requirements of Fuse

2-1.10.1 Fuse used as the lead into the Shell must be only one-piece safety fuse or other fuse that has been protected to resist side ignition.

2-1.10.2 The fuse must be long enough to extend at least 5 centimeters (2 inches) outside the launcher tube.

2-1.10.3 The fuse must be sufficiently rigid so as to not fall back into the launcher tube.

2-1.10.4 The fuse burning time from ignition of the tip of the fuse to ignition of the device must be at least 4 seconds but not more than 8 seconds.

2-1.10.5 The exposed fuse must resist side ignition for at least 3 seconds.

2-1.10.6 The entire fuse must be securely attached to the Shell so that it will support either the weight of the Shell plus 227 grams (8 ounces), or double the weight of the Shell, whichever is less, without separation from the Shell.

2-1.10.7 The location of the fuse must be obvious or must be clearly identified on the exterior of the device.

2-1.10.8 Fireworks devices subject to this Standard must have covered fuses that sucessfully resist ignition from open flames, hot surfaces and incendiary sparks when tested in accordance with test procedures found in PYR1129 – 2013 edition and any additional requirements specified by AFSL.

2-1.11 Requirements for Shells

2-1.11.1 The Shell must be constructed of materials that do not produce sharp fragments as a result of operation.

2-1.11.2 The shape of the shell must not increase the risk of binding in the launcher tube.

2-1.11.3 The outside diameter of Shells must not exceed 44.5 mm (1.75 inches).

© 2009 American Fireworks Standards Laboratory. All Right Reserved.

2-1.11.4 Individual Shells that are of cylindrical or other non-sherical shape must not exceed 101.6 mm (4 inches) in total length.

2-1.11.5 Shells must not contain pressed clay plugs, separators, or any other hard internal components capable of acting as projectiles when the Shell bursts.

2-1.11.6 The wall thickness of any reports must be sufficient to prevent simultaneous explosions

2-1.11.7 Each Shell must include both an orienting loop that is securely attached to the top of the Shell and a Shell wrapper or other means of securely maintaining correct Shell orientation.

2-1.11.8 Individual Shells that are of cylindrical or other non-spherical shape must bear the statement "THIS END UP" along with an arrow indicating the direction in which the shell should be placed inside the tube.

2-1.12 Streamers used in devices subject to this standard shall be constructed of flame retardant and of non-electrically conductive material.

2-1.13 Requirements for Shell Design

2-1.13.1 The Shell must not contain artwork, nose cones, fins, or other ornamentation that could cause the item to resemble a finished fireworks device.

2-1.13.2 The Shell exterior must be a single uniform color material, such as brown Kraft-paper type or other uniform single-color finish, without any design on the exterior of the Shell. No color decorations are permitted.

2-1.13.3 The Shell may bear a name, description or depiction of the effects produced, provided it does not exceed 1.4 linear inches in any direction.

2-1.13.4 The Shell may bear the name or logo of the manufacturer or distributor, or the brand name of the item, provided the name, logo, or brand name does not exceed one linear inch in any direction.

2-1.14 Retail Packaging

2-1.14.1 The retail package must not contain more than 12 Shells.

2-1.14.2 The retail package must not contain more than 400 grams of total chemical composition including lift charges.

2-1.14.3 Each retail package must contain at least one launcher tube.

2-1.15 Items subject to this Standard must not bear a name, bear graphics, or bear instructions suggesting a use of the product that is inconsistent with the cautionary labeling instructions.

2-2 REQUIREMENTS FOR DEVICES WITH MULTIPLE LAUNCHER TUBES

2-2.1 Devices subject to this Standard containing multiple launcher tubes mounted on a base and that have any tube measuring 1.5 inches (3.8 cm) or more inside diameter must withstand a minimum tilt angle of 60 degrees when tested in accordance with the procedures in **Appendix D**.

2-2.2 The Shells must be fused in such a manner that the Shells fire sequentially and not together.

© 2009 American Fireworks Standards Laboratory. All Right Reserved.

2-2.3 The launcher tube must be designed and constructed in a manner that will ensure that the shell may be fully inserted into the bottom of the tube without binding.

2-2.4 Multiple-tube reloadable devices with any tube inside diameter of greater than 1 inch (2.54 cm) must not tip over when shot on a 2-inch thick medium-density polyurethane foam pad.

Chapter 3 PERFORMANCE

3-1 STABILITY

3-1.1 The launcher assembly, containing one Shell, must remain upright when tilted 22 degrees from vertical against its shortest base dimension.

3-2 SHELLS

3-2.1 When fired in accordance with label instructions, Shells must be ejected in a near-vertical path.

3-2.2 When fired in accordance with label instructions, the minimum burst height of the shell must be 15 meters (49 feet).

3-2.3 Primary effects must extinguish at least 5 meters (16 feet) above the ground.

NOTE: Effects such as whistles, Comet tails, or audible effects produced as part of the lift function are not considered primary effects.

3-2.4 Flaming debris must be extinguished at least 3 meters (9.75 feet) above the ground.

NOTE: See **Appendix F** for schematic of trajectories and performance for Reloadable Tube Aerial Shell devices.

Chapter 4 LABELING

4-1 GENERAL REQUIREMENTS

4-1.1 Individual items must bear cautionary labeling giving a signal word, statement of hazard(s), and instructions for proper use.

4-1.2 All cautionary labeling must be located prominently and in the English language in conspicuous and legible type in contrast by typography, layout or color with any other printed or graphic matter on the label.

NOTE: See **Appendix B** for specific details regarding placement, conspicuousness, prominence, and minimum type size requirements for cautionary labels.

4-1.3 The name and place of business of the manufacturer, packer, seller, or distributor must appear on the label of each product.

4-1.4 The launcher tube must have a full caution label on the tube over or under the name of the device on the principal display panel(s) with the text parallel to the base.

4-1.5 Each individual Shell must be labeled in accordance with Section 4-3 of this Standard.

4-1.6 The common or usual name of the product, such as “Consumer Fireworks

© 2009 American Fireworks Standards Laboratory. All Right Reserved.

UN0336" or "Consumer Fireworks 1.4G," must appear on the label of each product.

4-2 Specific Labeling For Launcher Tubes and Retail Packages

4-2.1 Spherical-Shaped Reloadable Shell Devices without Report

WARNING
SHOOTS FLAMING BALLS

USE ONLY UNDER CLOSE ADULT SUPERVISION.
FOR OUTDOOR USE ONLY.
PLACE LAUNCHER UPRIGHT ON HARD, SMOOTH SURFACE.
UNWRAP LONG FUSE ON BALL.
PUT SHELL INTO TUBE WITH FLAT END DOWN AND WITH FUSE EXTENDING OUT OF TUBE.
DO NOT HOLD IN HAND.
LIGHT FUSE AND GET AWAY.

4-2.2 Spherical-Shaped Reloadable Shell Devices with Report

WARNING
SHOOTS FLAMING BALLS WITH REPORTS

USE ONLY UNDER CLOSE ADULT SUPERVISION.
FOR OUTDOOR USE ONLY.
PLACE LAUNCHER UPRIGHT ON HARD, SMOOTH SURFACE.
UNWRAP LONG FUSE ON BALL.
PUT SHELL INTO TUBE WITH FLAT END DOWN AND WITH FUSE EXTENDING OUT OF TUBE.
DO NOT HOLD IN HAND.
LIGHT FUSE AND GET AWAY.

4-2.3 Cylindrical or Non-Spherical-Shaped Reloadable Shell Devices without Report

WARNING
SHOOTS FLAMING BALLS

USE ONLY UNDER CLOSE ADULT SUPERVISION.
FOR OUTDOOR USE ONLY.
PLACE LAUNCHER UPRIGHT ON HARD SMOOTH SURFACE.
UNWRAP LONG FUSE ON SHELL.
PUT SHELL INTO TUBE WITH ARROW POINTING UP AND WITH FUSE EXTENDING OUT OF TUBE.
DO NOT HOLD IN HAND.
LIGHT FUSE AND GET AWAY.

4-2.4 Cylindrical or Non-Spherical-Shaped Reloadble Shell Devices with Report

WARNING
SHOOTS FLAMING BALLS WITH REPORTS

USE ONLY UNDER CLOSE ADULT SUPERVISION.
FOR OUTDOOR USE ONLY.
PLACE LAUNCHER UPRIGHT ON HARD SMOOTH SURFACE.
UNWRAP LONG FUSE ON SHELL.
PUT SHELL INTO TUBE WITH ARROW POINTING UP AND WITH FUSE EXTENDING OUT OF TUBE.
DO NOT HOLD IN HAND.
LIGHT FUSE AND GET AWAY.

4-3 Specific Labeling for Individual Shells

The following label must appear on the bottom half of the Shell in a type size meeting AFSL type size requirements for the Shell.

NOTE: The full warning label must not appear on the individual Shells.

4-3.1 Shells without Report

© 2009 American Fireworks Standards Laboratory. All Right Reserved.

WARNING
SHOOTS FLAMING BALLS

SEE ADDITIONAL CAUTIONS ON LAUNCHER TUBE AND BOX.

4-3.2 Shells with Reports

WARNING
SHOOTS FLAMING BALLS WITH REPORTS

SEE ADDITIONAL CAUTIONS ON LAUNCHER TUBE AND BOX

4-3.3 The following label must appear on the top half of the Shell directly above the cautionary label.

MUST BE USED IN LAUNCHER TUBE

NOTE: Section 2-1.8.7 requires that individual Shells that are of cylindrical or other non-spherical shape must bear the statement "THIS END UP" along with an arrow indicating the direction in which the Shell should be placed inside the tube. See the following diagram:

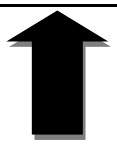

THIS END UP

NOTE: For shells packaged in a retail box containing both spherical shaped and cylinderical shaped shells, all shells in the retail package must bear the required labeling for cylinderical shaped shells.

4-4 SPECIFIC LABELING FOR BOX INSERT

4-4.1 In addition to the appropriate cautions indicated on the product label, the following cautionary information must be clearly printed on a single page and placed in the display package on top of the contents:

4-4.1.1 Spherical Shaped Reloadable Shell Devices

WARNING
SHOOTS FLAMING BALLS (WITH REPORTS, if present)

USE ONLY UNDER CLOSE ADULT SUPERVISION.
FOR OUTDOOR USE ONLY.
PLACE LAUNCHER UPRIGHT ON HARD, SMOOTH SURFACE.
UNWRAP LONG FUSE ON BALL.
PUT SHELL INTO TUBE WITH FLAT END DOWN AND WITH FUSE EXTENDING OUT OF TUBE.
DO NOT HOLD IN HAND.
LIGHT FUSE AND GET AWAY.

Safety Practices for Handling and Use

Always wear eye protection when using this device.
Never use a Shell or launcher that has been wet or damaged.
Always make sure the area overhead is free from obstructions and that no spectators or flammable materials are within a 40 foot circle.
Never force a Shell into the launcher tube.
Never load more than one Shell at a time into launcher tube.
Always light the fuse only on the tip.
Never have any part of your body over the device when lighting the fuse.
After lighting the fuse, immediately move at least 20 feet away from the launcher.
Never relight a fuse that fails to ignite the device.
Always wait at least 30 seconds between loading Shells.
Never ignite the Shell outside the launcher tube.
Never take the Shell apart.

4-4.1.2 Cylinderical or Non-spherical Shaped Reloadable Shell Devices

© 2009 American Fireworks Standards Laboratory. All Right Reserved.

WARNING
SHOOTS FLAMING BALLS (WITH REPORTS, if present)

USE ONLY UNDER CLOSE ADULT SUPERVISION.
FOR OUTDOOR USE ONLY.
PLACE LAUNCHER UPRIGHT ON HARD, SMOOTH SURFACE.
UNWRAP LONG FUSE ON BALL.
PUT SHELL INTO TUBE WITH ARROW POINTING UP AND WITH FUSE EXTENDING OUT OF TUBE.
DO NOT HOLD IN HAND.
LIGHT FUSE AND GET AWAY.

Safety Practices for Handling and Use

Always wear eye protection when using this device.
Never use a Shell or launcher that has been wet or damaged.
Always make sure the area overhead is free from obstructions and that no spectators or flammable materials are within a 40 foot circle.
Never force a Shell into the launcher tube.
Never load more than one Shell at a time into launcher tube.
Always light the fuse only on the tip.
Never have any part of your body over the device when lighting the fuse.
After lighting the fuse, immediately move at least 20 feet away from the launcher.
Never relight a fuse that fails to ignite the device.
Always wait at least 30 seconds between loading Shells.
Never ignite the Shell outside the launcher tube.
Never take the Shell apart.

Chapter 5 SHIPPING

5-1 GENERAL REQUIREMENTS

5-1.1 All consumer fireworks must comply with certain regulations promugated by the United States Department of Transportation. These regulations govern approval of fireworks for shipment, construction and testing of their shipping containers, and the marking and labeling of the containers.

NOTE: See **Appendix C** for a summary of these requirements. However, **Appendix C** is only a summary and not a complete discussion. Title 49 of the United States Code should be consulted for complete information.

5-1.2 Product design, packaging, and case packing must produce a finished shipping case in which simultaneous explosion of all the items does not result from ignition of one item in the shipping case.

5-1.3 The package must not be so difficult to open that the contents might be damaged as a result of opening.

5-1.4 These items must be securely packaged for shipping in such a way that they are protected from moisture or physical damage during transportation and so that there is no risk of any of the contents escaping from the shipping case.

© 2009 American Fireworks Standards Laboratory. All Right Reserved.

AFSL 109

STANDARD FOR ROMAN CANDLES

OCTOBER 2017 EDITION

THIS STANDARD INCLUDES SPECIFICATIONS FOR THE FOLLOWING PRODUCTS:

Classification 37 - Roman Candles with Spikes and Roman Candles without Spikes

© 2009 American Fireworks Standards Laboratory. All Right Reserved.

TABLE OF CONTENTS

Chapter 1 GENERAL

1-1 Introduction

1-2 Definitions

Chapter 2 PRODUCT DESIGN

2-1 General Requirements
- 2-1.1 Sharp Fragments
- 2-1.2 Impact Sensitivity
- 2-1.3 Similarity to Candy or Other Foods
- 2-1.4 Pyrotechnic Leakage
- 2-1.5 Prohibited Chemical
- 2-1.6 Assembly of Items
- 2-1.7 Burnout and Blowout
- 2-1.8 Limits of Chemical Composition
- 2-1.9 Requirements for Fuse
- 2-1.10 Plugs
- 2-1.11 Limit on Number of Shots
- 2-1.12 Equal Number of Shots Per Tube In Retail Package
- 2-1.13 Minimum Height for Reports
- 2-1.14 Continuous External Flame
- 2-1.15 Names and Graphics Inconsistent with Labeling

2-2 Specific Requirements for Roman Candles With Spikes

Chapter 3 LABELING

3-1 General Labeling Requirements

3-2 Product-Specific Labeling Requirements

Chapter 4 SHIPPING

4-1 General Shipping Requirements

© 2009 American Fireworks Standards Laboratory. All Right Reserved.

STANDARD FOR ROMAN CANDLES

Chapter 1 GENERAL

1-1 INTRODUCTION

1-1.1 This Standard applies to the manufacture of the traditional category of Roman Candles, consisting of a tube containing several alternating layers of compacted black powder and effects such as stars and reports. The unit of sale usually consists of several individual items boxed or packaged together, but may be single units.

1-1.2 This Standard applies to devices intended primarily for use by the general public.

1-1.3 This Standard enables manufacturers to produce fireworks devices in accordance with applicable United States requirements for labeling, composition, and performance.

1-1.4 This Standard excludes items that are defined as “Specialty Items” in Section 1-2.10 of the Standard for Specialty Items.

1-2 DEFINITIONS

1-2.1 Ball - A "star" expelled from a Roman Candle (see definition for "Star").

1-2.2 Blowout - The unintended release of a pressure effect from other than the intended orifice of a fireworks device.

1-2.3 Burnout - The unintended escape of flame through the wall of a pyrotechnic chamber during functioning of a fireworks device.

1-2.4 Chemical Composition - All pyrotechnic and explosive composition contained in a fireworks device (see also "Pyrotechnic Composition" and "Explosive Composition" definitions).

1-2.5 Explosive Composition - Any chemical compound or mixture, the primary purpose of which is to function by explosion, producing an audible effect in a fireworks device.

1-2.6 Propellant - Chemical composition, consisting of black powder or equivalent, which is used to propel one or more visible or audible aerial effects into the air.

1-2.7 Pyrotechnic Composition - A chemical mixture that, on burning and without explosion, produces visible displays, bright lights, whistles, or motion.

1-2.8 Plug - The non-flammable material pressed or otherwise firmly affixed to the bottom of a Roman Candle and intended to prevent blowout or expulsion of the spike.

1-2.9 Report - A loud noise or "bang."

1-2.10 Safety Fuse - A fuse consisting of a thread-wrapped powder train that has been coated with lacquer sufficient to prevent side ignition when tested in accordance with the

© 2009 American Fireworks Standards Laboratory. All Right Reserved.

AFSL test procedure for side ignition resistance.

1-2.11 Star – A small pellet of compressed pyrotechnic composition that is projected into the air from Roman Candles and other types of fireworks and that burns in the air, producing various visual effects.

1-2.12 Side Ignition - The ignition of a fuse at other than the tip when the side of the fuse is placed in direct contact with the glowing end of a burning cigarette.

1-2.13 Throat - The barrel of a Roman Candle through which the effects pass.

Chapter 2 PRODUCT DESIGN

2-1 GENERAL REQUIREMENTS

2-1.1 The construction of the item must be of such composition and design that no sharp fragments are produced upon functioning (or malfunctioning).

2-1.2 The finished item must not be impact sensitive or have a risk of premature ignition or explosion during transportation, handling or normal operation.

2-1.3 The finished item must not be designed or packaged in such a manner that it could be confused with candy or other foods if it is of a size or configuration that could be ingested.

2-1.4 The construction of the item must be adequate to prevent leakage of the chemical composition at any time.

2-1.5 The chemical composition of the item must not contain prohibited chemicals except as trace impurities.

NOTE: Prohibited and permitted chemicals are listed in **Appendix A**.

2-1.6 Roman Candles must be assembled and packaged so as to prevent damage to the items during transportation, handling, and normal operation.

2-1.7 The pyrotechnic chamber in Roman Candles must be constructed in a manner that allows normal functioning in a normal manner without burnout or blowout, including expulsion of any spike.

2-1.8 Limits of Chemical Composition

2-1.8.1 Roman Candles must not contain more than 20 grams (0.7 ounces) of chemical composition per tube.

2-1.8.2 Any individual unit in a Roman Candle must not contain more than 5 grams of chemical composition.

2-1.8.3 Explosive components of Roman Candles intended to produce reports must not contain more than 130 mg (2 grains) of explosive composition per report.

2-1.9 Requirements for Fuse

2-1.9.1 The fuse used as the lead into the body of the item must be only safety fuse or other fuse that has been protected to resist side ignition.

2-1.9.2 The location of the fuse must be obvious or must be clearly identified on the exterior of the candle.

© 2009 American Fireworks Standards Laboratory. All Right Reserved.

2-1.9.3 The fuse burning time from ignition of the tip of the fuse to ignition of the device must be at least 4 seconds but not more than 11 seconds.

2-1.9.4 Exposed fuse must resist side ignition for at least 3 seconds.

2-1.9.5 For multi-effect or multi-tube items the timing between effects (or tubes) must not exceed 10 seconds.

2-1.9.6 The entire fuse must be securely attached to the item so that it will support either the weight of the item plus 227 grams (8 ounces), or double the weight of the item, whichever is less, without separation from the item.

2-1.9.7 Fireworks devices subject to this Standard must have covered fuses that sucessfully resist ignition from open flames, hot surfaces and incendiary sparks when tested in accordance with test procedures found in PYR1129 – 2013 edition and any additional requirements specified by AFSL.

2-1.10 Plugs

2-1.10.1 The pyrotechnic chamber must have a plug adequate to prevent blowout or expulsion of any spike from the bottom of the candle.

2-1.10.2 The plugs of individual tubes must be made of clay or other non-flammable material.

2-1.10.3 The plugs must be securely installed in the tubes.

2-1.10.4 The material and construction of the plugs must resist breakage or separation during transportation, handling, and normal use, and must not produce sharp fragments if an effect bursts prematurely in the tube.

2-1.10.5 The minimum required total distance between the bottom of the pyrotechnic chamber and the bottom of the tube must be at least 4 inches (10.2 cm).

2-1.11 Roman Candles must contain at least 5 and not more than 10 shots each.

2-1.12 All Roman Candles within one retail package must contain an equal number of shots.

2-1.13 Reports, if present, must take place in the air at least 3 meters (9.75 feet) from the launch point.

2-1.14 The pyrotechnic composition must not produce a continuous external flame longer than 0.5 meters (20 inches) during operation.

NOTE: Sparks are not considered to be continuous flame.

2-1.15 Items subject to this Standard must not bear a name or bear graphics suggesting a use of the product that is inconsistent with the cautionary labeling instructions.

2-2 SPECIFIC REQUIREMENTS FOR SPIKES

2-2.1 Roman Candles are permitted to have a spike suitable for mounting in the ground. Spikes must be securely attached or be an integral part of the item.

2-2.2 External spike length must be at least 5 centimeters (2 inches).

© 2009 American Fireworks Standards Laboratory. All Right Reserved.

2-2.3 There must not be any chemical composition between the bottom of the pyrotechnic chamber plug and the external end of the spike.

2-2.4 Spikes must have a blunt tip and must be not less than 3.2 millimeters (1/8 inch) in diameter.

2-2.5 The minimum required total distance from the bottom of the plug to the external blunt end of the spike must be at least 4 inches (10.2cm).

2-2.6 Spikes must be constructed of a material that allows the device to be mounted in the ground.

Chapter 3 LABELING

3-1 General Requirements

3-1.1 Individual items must bear cautionary labeling giving a signal word, statement of hazard(s), and instructions for proper use.

3-1.2 All cautionary labeling must be located prominently and in the English language in conspicuous and legible type in contrast by typography, layout or color with any other printed or graphic matter on the label.

NOTE: See **Appendix B** for specific details regarding placement, conspicuousness, prominence, and minimum type size requirements for cautionary labels.

3-1.3 The name and place of business of the manufacturer, packer, distributor, or seller must appear on the label of each product.

3-1.4 The common or usual name of the product, such as "Consumer Fireworks UN0336" or "Consumer Fireworks 1.4G," must appear on the label of each product.

3-2 Product-Specific Labeling

3-2.1 Roman Candles with Spikes and without Report (Classification 37)

WARNING
SHOOTS FLAMING BALLS

DO NOT HOLD IN HAND.
USE ONLY UNDER CLOSE ADULT SUPERVISION.
FOR OUTDOOR USE ONLY.
STICK SPIKE END IN GROUND AND POINT AWAY FROM PEOPLE OR FLAMMABLE MATERIAL.
LIGHT FUSE AND GET AWAY.

3-2.2 Roman Candles with Spikes and with Report (Classification 37)

WARNING
SHOOTS FLAMING BALLS WITH REPORT

DO NOT HOLD IN HAND.
USE ONLY UNDER CLOSE ADULT SUPERVISION.
FOR OUTDOOR USE ONLY.
STICK SPIKE END IN GROUND AND POINT AWAY FROM PEOPLE OR FLAMMABLE MATERIAL.
LIGHT FUSE AND GET AWAY.

3-2.3 Roman Candles without Spikes and without Report (Classification 37)

© 2009 American Fireworks Standards Laboratory. All Right Reserved.

WARNING
SHOOTS FLAMING BALLS

DO NOT HOLD IN HAND.
USE ONLY UNDER CLOSE ADULT SUPERVISION.
FOR OUTDOOR USE ONLY.
BURY TUBE HALFWAY IN SAND OR SOIL AND POINT AWAY FROM PEOPLE AND FLAMMABLE MATERIAL.
LIGHT FUSE AND GET AWAY.

3-2.4 Roman Candles without Spikes and with Report (Classification 37)

WARNING
SHOOTS FLAMING BALLS WITH REPORT

DO NOT HOLD IN HAND.
USE ONLY UNDER CLOSE ADULT SUPERVISION.
FOR OUTDOOR USE ONLY.
BURY TUBE HALFWAY IN SAND OR SOIL AND POINT AWAY FROM PEOPLE AND FLAMMABLE MATERIAL.
LIGHT FUSE AND GET AWAY.

3-2.5 Roman Candle with Launcher Tube

3-2.5.1 Roman Candle with Launcher Tube

WARNING
SHOOTS FLAMING BALLS WITH REPORT

DO NOT HOLD IN HAND.
USE ONLY UNDER CLOSE ADULT SUPERVISION.
FOR OUTDOOR USE ONLY.
PUSH ROMAN CANDLE INSIDE LAUNCHER TUBE SUPPLIED WITH PACKAGE.
MAKE SURE LAUNCHER TUBE IS PUSHED FIRMLY IN GROUND.
POINT AWAY FROM PEOPLE OR FLAMMABLE MATERIAL.
LIGHT FUSE AND GET AWAY.

3-2.5.2 Cautionary Label for Roman Candle Launcher Tube

ROMAN CANDLE LAUNCHER TUBE

DO NOT HOLD IN HAND.
USE ONLY UNDER CLOSE ADULT SUPERVISION.
FOR OUTDOOR USE ONLY.
PUSH SPIKE FIRMLY INTO SOFT GROUND.
MAKE SURE LAUNCHER TUBE WILL NOT FALL OVER.
CAREFULLY READ THE WARNING ON EACH INDIVIDUAL ROMAN CANDLE BEFORE USE.
PLACE ROMAN CANDLE INSIDE LAUNCHER TUBE.
POINT AWAY FROM PEOPLE OR FLAMMABLE MATERIAL.
LIGHT FUSE AND GET AWAY.

Chapter 4 SHIPPING

4-1 General Requirements

4-1.1 All consumer fireworks must comply with certain regulations promulgated by the United States Department of Transportation. These regulations govern approval of fireworks for shipment, construction and testing of their shipping containers, and the marking and labeling of the containers.

NOTE: See **Appendix C** for a summary of these requirements. However, **Appendix C** is only a summary and not a complete discussion. Title 49 of the United States Code should be consulted for complete information.

4-1.2 Product design, packing, and case packing must produce a finished shipping case in which simultaneous explosion of all the items does not result from ignition of one item in the shipping case.

© 2009 American Fireworks Standards Laboratory. All Right Reserved.

4-1.3 The package must not be so difficult to open that the contents might be damaged as a result of opening.

4-1.4 These items must be securely packaged for shipping in such a way that they are protected from moisture or physical damage during transportation and so that there is no risk of any of the contents escaping from the shipping case.

© 2009 American Fireworks Standards Laboratory. All Right Reserved.

AFSL 110

STANDARD FOR SKY ROCKETS, MISSILES, AND HELICOPTERS

OCTOBER 2017 EDITION

THIS STANDARD INCLUDES SPECIFICATIONS FOR THE FOLLOWING PRODUCTS:

Classification 16 - Helicopters

Classification 24 - Missiles

Classification 38 – Sky Rockets

© 2009 American Fireworks Standards Laboratory. All Right Reserved.

TABLE OF CONTENTS

Chapter 1 GENERAL

1-1 Introduction

1-2 Definitions

Chapter 2 PRODUCT DESIGN

2-1 General Requirements
- 2-1.1 Sharp Fragments
- 2-1.2 Sharp Edges and Points
- 2-1.3 Impact Sensitivity
- 2-1.4 Similarity to Candy or Other Foods
- 2-1.5 Pyrotechnic Leakage
- 2-1.6 Prohibited Chemical
- 2-1.7 Assembly of Items
- 2-1.8 Burnout and Blowout
- 2-1.9 Limits of Chemical Composition
- 2-1.10 Break Charge Limit for Rockets with Shell Component
- 2-1.11 Report Limit
- 2-1.12 Simultaneous Explosion of Reports
- 2-1.13 Requirements for Fuse
- 2-1.14 Attachment of Flight Stabilizing Features
- 2-1.15 Non-Electrically Conductive Components for Streamers
- 2-1.16 Name or Graphics Inconsistent with Labeling

2-2 Specific Requirements for Sky Rockets
- 2-2.1 Stick Rigidity

2-3 Specific Requirements for Missiles
- 2-3.1 Base-to-Height Ratio
- 2-3.2 Tilt Test

2-4 Specific Requirement for Helicopters

© 2009 American Fireworks Standards Laboratory. All Right Reserved.

Chapter 3 PERFORMANCE

3-1 General Requirements
- 3-1.1 Primary Effects Height Requirement
- 3-1.2 Primary Effects Minimum Distance from Ground
- 3-1.3 Flaming Debris
- 3-1.4 Minimum Height for Primary Effect
- 3-1.5 Maximum Spread for Primary Effect

3-2 Specific Requirement for Sky Rockets
- 3-2.1 Flight Direction

3-3 Specific Requirement for Missiles and Helicopters
- 3-3.1 Flight Direction

Chapter 4 LABELING

4-1 General Requirements

4-2 Product-Specific Labeling

Chapter 5 SHIPPING

5-1 General Requirements

© 2009 American Fireworks Standards Laboratory. All Right Reserved.

STANDARD FOR SKY ROCKETS, MISSILES, AND HELICOPTERS

Chapter 1 GENERAL

1-1 INTRODUCTION

1-1.1 This Standard applies to the manufacture of a class of Sky Rockets, Missiles, and Helicopters designed to be launched overhead, producing visual or audible effects near the peak of trajectory. The unit of sale usually consists of several fully assembled units packaged together.

1-1.2 This Standard applies to devices intended primarily for use by the general public.

1-1.3 This Standard enables manufacturers to produce fireworks devices in accordance with applicable United States requirements for labeling, composition, and performance.

1-1.4 This Standard excludes items that are defined as “Specialty Items” in Section 1-2.10 of the Standard for Specialty Items.

1-2 DEFINITIONS

1-2.1 Blowout - The unintended release of a pressure effect from other than the intended orifice of the device.

1-2.2 Burnout - The unintended escape of flame through the wall of a pyrotechnic chamber during functioning of a fireworks device.

1-2.3 Chemical Composition - All pyrotechnic and explosive composition contained in a fireworks device. (See also "Pyrotechnic Composition" and "Explosive" definitions).

1-2.4 Explosive Composition - Any chemical compound or mixture, the primary purpose of which is to function by explosion, producing an audible effect in a fireworks device.

1-2.5 Helicopter - A tube containing chemical composition with a propeller or blade attached. Upon ignition the device spins rapidly and rises into the air.

1-2.6 Missile - A device similar to a Sky Rocket in size, composition, and effect that uses fins rather than a stick for launching, guidance, and stability.

1-2.7 Primary Visual or Audible Effect(s) - The major effect(s) for a fireworks device, such as a report, a shower of sparks, or an aerial flaming ball. The lift function of the motor (propellant) is not considered to be a primary effect.

1-2.8 Pyrotechnic Composition - A chemical mixture that, on burning and without explosion, produces visible displays, bright lights, whistles, or motion.

1-2.9 Report - A loud noise or "bang."

© 2009 American Fireworks Standards Laboratory. All Right Reserved.

1-2.10 Safety Fuse - A fuse consisting of a thread-wrapped powder train that has been coated with lacquer sufficient to prevent side ignition when tested in accordance with the AFSL test procedure for side ignition resistance.

1-2.11 Side Ignition - The ignition of a fuse at other than the tip when the side of the fuse is placed in direct contact with the glowing end of a burning cigarette.

1-2.12 Sky Rocket - A tube containing chemical composition with a wooden stick attached for guidance and stability. Upon ignition the device rises into the air and may produce a burst of color and/or sound at or near the peak of flight.

Chapter 2 PRODUCT DESIGN

2-1 GENERAL REQUIREMENTS

2-1.1 The construction of the item must be of such composition and design that no sharp fragments are produced upon functioning (or malfunctioning).

2-1.2 These items must be constructed without sharp edges or sharp points.

2-1.3 The finished item must not be impact sensitive or have a risk of premature ignition or explosion during transportation, handling, or normal operation.

2-1.4 The finished item must not be designed or packaged in such a manner that it could be confused with candy or other foods if it is of a size or configuration that could be ingested.

2-1.5 The construction of the item must be adequate to prevent leakage of the chemical composition at any time.

2-1.6 The chemical composition of the item must not contain prohibited chemical except as trace impurities.

NOTE: Prohibited and permitted chemicals are listed in **Appendix A**.

2-1.7 Devices subject to this Standard must be assembled and packaged so as to prevent damage during transportation, handling, and normal operation.

2-1.8 The pyrotechnic chamber in devices subject to this Standard must be constructed in a manner that allows normal functioning without burnout or blowout.

2-1.9 The total amount of chemical composition for Rockets, Missiles, or Helicopters, including propellant, primary, and any other effects, must not exceed 20 grams (0.7 ounces).

2-1.10 For devices subject to this Standard that are manufactured with a primary effect comprised of a Shell with a diameter greater than 1 inch, the break charge of the device must not contain more than 25% of the total chemical composition inside the Shell or 5 grams, whichever is less. For devices subject to this Standard that are manufactured with a primary effect comprised of a Shell with a diameter smaller than 1 inch, the break charge of the device must not contain more than 50% of the total chemical composition inside the Shell or 5 grams, whichever is less.

© 2009 American Fireworks Standards Laboratory. All Right Reserved.

2-1.11 Explosive components of Rockets, Missiles or Helicopters intended to produce reports must not contain more than 2 grains (130 mg) of explosive composition each.

2-1.12 Report charges must be designed to prevent simultaneous explosion.

2-1.13 Requirements for Fuse

2-1.13.1 The fuse used as the lead into the body of the item must be only safety fuse or other fuse that has been protected to resist side ignition.

NOTE: Items that require a restricted orifice for proper functioning and contain less than 6 grams of pyrotechnic composition do not require a fuse that is resistant to side ignition.

2-1.13.2 The location of the fuse must be obvious or be clearly identified on the exterior of the device.

2-1.13.3 The fuse burning time from ignition of the tip of the fuse to ignition of the device must be at least 4 seconds but not more than 8 seconds.

2-1.13.4 Exposed fuse must resist side ignition for at least 3 seconds.

2-1.13.5 The entire fuse must be securely attached to the item so that it will support the weight of the item plus 227 grams (8 ounces) or double the weight of the item, whichever is less, without separating from the item.

2-1.13.6 Fireworks devices subject to this Standard must have covered fuses that sucessfully resist ignition from open flames, hot surfaces and incendiary sparks when tested in accordance with test procedures found in PYR1129 – 2013 edition and any additional requirements specified by AFSL.

2-1.14 Flight stabilizing features such as sticks, wings or fins must be securely attached to the items so as to prevent them from being damaged or detached during transportation, handling, and normal operation.

2-1.15 Streamers used in devices subject to this standard must be constructed of flame retardant and of non-electrically conductive material.

2-1.16 Items subject to this Standard must not bear a name or bear graphics suggesting a use of the product that is inconsistent with the cautionary labeling instructions.

2-2 SPECIFIC REQUIREMENTS FOR SKY ROCKETS

2-2.1 The flight stabilizing stick on rockets must be straight and rigid to provide a direct and stable flight, must remain straight and rigid, and must remain attached to the drivers so as to prevent the stick from being damaged or detached during transportation, handling, and normal operation.

2-3 SPECIFIC REQUIREMENTS FOR MISSILES

2-3.1 The base or bottom of a Missile must have the minimum horizontal dimension of the base (i.e. the fins) equal to at least one-third of the height of the device including any base or cap affixed thereto.

2-3.2 Missiles must remain upright when tilted 18 degrees from the horizontal against their shortest base dimension.

© 2009 American Fireworks Standards Laboratory. All Right Reserved.

2-4 SPECIFIC REQUIREMENTS FOR HELICOPTERS

2-4.1 Helicopters must have the top clearly marked for proper functioning.

Chapter 3 PERFORMANCE

3-1 GENERAL REQUIREMENTS

3-1.1 Primary effects, visual or audible, must take place at or near the peak of the trajectory of the device.

3-1.2 Primary effects must be extinguished within 5 meters (16 feet) of the ground.

NOTE: The lift function of the motor (the propellant) is not considered to be a primary effect.

3-1.3 Flaming debris from the device must be extinguished above 3 meters (10 feet) from the ground.

3-1.4 The ignited device, when launched according to the instructions, must reach a height of not less than 15 meters (49 feet).

3-1.5 The effects of the device must not extend beyond 5 meters (16 feet) in any direction perpendicular to the path of the device.

NOTE: Helicopters without primary visual or audible effects (stars or reports) are exempt from the minimum height requirements. The lift charge (propellant) is not considered to be a primary effect.

3-2 SPECIFIC REQUIREMENTS FOR SKY ROCKETS

3-2.1 The flight direction of Sky Rockets must be predictable within 45 degrees on either side of the direction of launch.

NOTE: See Figure 1 of **Appendix G** for a schematic diagram of the trajectory requirement for Sky Rockets.

3-3 SPECIFIC REQUIREMENT FOR MISSILES AND HELICOPTERS

3-3.1 The flight direction of Missiles and Helicopters launched straight overhead must be within 22 1/2 degrees in any direction from the vertical up to the minimum height of 15 meters (49 feet).

NOTE: See Figure 2 of **Appendix H** for a schematic diagram of trajectory requirements for Missiles and Helicopters.

Chapter 4 LABELING

4-1 GENERAL REQUIREMENTS

4-1.1 Individual items must bear cautionary labeling giving a signal word, statement of hazard(s), and instructions for proper use on the principal display panel(s) of the item.

4-1.2 All cautionary labeling must be located prominently and in the English language in conspicuous and legible type in contrast by typography, layout or color with any other printed or graphic matter on the label.

© 2009 American Fireworks Standards Laboratory. All Right Reserved.

4-1.3 The name and place of business of the manufacturer, packer, distributor, or seller must appear on the label of each product.

NOTE: See **Appendix B** for specific details regarding placement, conspicuousness, prominence, and minimum type size requirements for cautionary labels.

4-1.4 The common or usual name of the product , such as "Consumer Fireworks UN0336" or Consumer Fireworks 1.4G," must appear on the label of each product.

4-2 Product-Specific Labeling

4-2.1 Bottle Rocket - Individual motor tubes which are 3/8 inch or less in O.D. and 3 inches or less in length must bear the following labeling on each individual Rocket's motor tubes.

4-2.1.1 Bottle Rocket with Report (Individual Rocket)

WARNING
FLAMMABLE WITH REPORT

CAREFULLY READ CAUTIONS ON PACKAGE.

4-2.1.2 Bottle Rocket without Report (Individual Rocket)

WARNING
FLAMMABLE

CAREFULLY READ CAUTIONS ON PACKAGE.

4-2.1.3 Package Label of Bottle Rocket with Report

WARNING
FLAMMABLE ROCKET WITH REPORT

USE ONLY UNDER CLOSE ADULT SUPERVISION.
FOR OUTDOOR USE ONLY.
PLACE IN WOODEN TROUGH OR IRON PIPE AT 75-DEGREE ANGLE POINTING AWAY FROM PEOPLE AND FLAMMABLE MATERIAL.
DO NOT HOLD IN HAND.
LIGHT FUSE AND GET AWAY.
THIS ROCKET TRAVELS AT HIGH SPEEDS AND CAN TRAVEL LONG DISTANCES.
MISUSE MAY RESULT IN INJURY OR FIRE.

4-2.1.4 Package Label of Bottle Rocket without Report

WARNING
FLAMMABLE ROCKET

USE ONLY UNDER CLOSE ADULT SUPERVISION.
FOR OUTDOOR USE ONLY.
PLACE IN WOODEN TROUGH OR IRON PIPE AT 75-DEGREE ANGLE POINTING AWAY FROM PEOPLE AND FLAMMABLE MATERIAL.
DO NOT HOLD IN HAND.
LIGHT FUSE AND GET AWAY.
THIS ROCKET TRAVELS AT HIGH SPEEDS AND CAN TRAVEL LONG DISTANCES.
MISUSE MAY RESULT IN INJURY OR FIRE.

4-2.2 Sky Rockets – Individual motor tubes which are greater than 3/8 inch in O.D. and more than 3 inches in length must bear the following labeling on each individual rocket's motor tubes.

4-2.2.1 Sky Rocket with Report (Classification 38)

© 2009 American Fireworks Standards Laboratory. All Right Reserved.

WARNING
FLAMMABLE ROCKET WITH REPORT

USE ONLY UNDER CLOSE ADULT SUPERVISION.
FOR OUTDOOR USE ONLY.
PLACE IN WOODEN TROUGH OR IRON PIPE AT 75-DEGREE ANGLE POINTING AWAY FROM PEOPLE AND FLAMMABLE MATERIAL.
DO NOT HOLD IN HAND.
LIGHT FUSE AND GET AWAY.
THIS ROCKET TRAVELS AT HIGH SPEEDS AND CAN TRAVEL LONG DISTANCES.
MISUSE MAY RESULT IN INJURY OR FIRE.

4-2.2.2 Sky Rocket without Report
(Classification 38)

WARNING
FLAMMABLE ROCKET

USE ONLY UNDER CLOSE ADULT SUPERVISION.
FOR OUTDOOR USE ONLY.
PLACE IN WOODEN TROUGH OR IRON PIPE AT 75-DEGREE ANGLE POINTING AWAY FROM PEOPLE AND FLAMMABLE MATERIAL.
DO NOT HOLD IN HAND.
LIGHT FUSE AND GET AWAY.
THIS ROCKET TRAVELS AT HIGH SPEEDS AND CAN TRAVEL LONG DISTANCES.
MISUSE MAY RESULT IN INJURY OR FIRE.

4-2.2.3 Reloadable Rocket

WARNING
FLAMMABLE ROCKET

USE ONLY UNDER CLOSE ADULT SUPERVISION.
FOR OUTDOOR USE ONLY.
PUSH LAUNCHER TUBE FIRMLY INTO GROUND.
PLACE ROCKET INSIDE LAUNCHER TUBE AT 75-DEGREE ANGLE POINTING AWAY FROM PEOPLE AND FLAMMABLE MATERIAL.
DO NOT HOLD IN HAND.
LIGHT FUSE AND GET AWAY.
THIS ROCKET TRAVELS AT HIGH SPEEDS AND CAN TRAVEL LONG DISTANCES.
MISUSE MAY RESULT IN INJURY OR FIRE.

4-2.3 Missiles

4-2.3.1 Missile with Report
(Classification 24)

WARNING
FLAMMABLE MISSILE WITH REPORT

USE ONLY UNDER CLOSE ADULT SUPERVISION.
FOR OUTDOOR USE ONLY.
PLACE ON HARD OPEN SURFACE.
DO NOT HOLD IN HAND.
LIGHT FUSE AND GET AWAY.
THIS MISSLE TRAVELS AT HIGH SPEEDS AND CAN TRAVEL LONG DISTANCES.
MISUSE MAY RESULT IN INJURY OR FIRE.

4-2.3.2 Missile without Report
(Classification 24)

WARNING
FLAMMABLE MISSILE

USE ONLY UNDER CLOSE ADULT SUPERVISION.
FOR OUTDOOR USE ONLY.
PLACE ON HARD OPEN SURFACE.
DO NOT HOLD IN HAND.
LIGHT FUSE AND GET AWAY.
THIS MISSLE TRAVELS AT HIGH SPEEDS AND CAN TRAVEL LONG DISTANCES.
MISUSE MAY RESULT IN INJURY OR FIRE.

4-2.3.3 Missile with Launcher Stand

WARNING
FLAMMABLE
SHOOTS UPWARD

USE ONLY UNDER CLOSE ADULT SUPERVISION.
FOR OUTDOOR USE ONLY.
DO NOT HOLD IN HAND.
PLACE LAUNCHER STAND ON HARD OPEN SURFACE.
LIGHT FUSE AND GET AWAY.
DO NOT FIRE WITHOUT LAUNCHING STAND.

© 2009 American Fireworks Standards Laboratory. All Right Reserved.

4-2.3.4 Multiple Tube Missiles (e.g. Wolfpack Missiles)

WARNING
SHOOTS MISSILE IN AIR

USE ONLY UNDER CLOSE ADULT SUPERVISION.
FOR OUTDOOR USE ONLY.
DO NOT HOLD IN HAND.
PLACE UPRIGHT AND USE ONLY ON CONCRETE, ASPHALT, OR OTHER HARD LEVEL SURFACE.
THIS ITEM MAY TIP OVER IF USED ON GRASS OR OTHER UNEVEN SURFACES AND SERIOUS INJURY COULD RESULT.
NEVER HAVE ANY PART OF YOUR BODY OVER THE DEVICE WHEN LIGHTING THE FUSE.
LIGHT FUSE AND GET AWAY.
NEVER RE-LIGHT A FUSE WHICH FAILS TO IGNITE THE DEVICE.

4-2.4 Helicopters

4-2.4.1 Helicopter with Report (Classification 16)

WARNING
SPINS UPWARD
EMITS SHOWERS OF SPARKS WITH REPORT

USE ONLY UNDER CLOSE ADULT SUPERVISION.
FOR OUTDOOR USE ONLY.
PLACE ON HARD OPEN SURFACE.
DO NOT HOLD IN HAND.
LIGHT FUSE AND GET AWAY.

4-2.4.2 Helicopter without Report (Classification 16)

WARNING
SPINS UPWARD
EMITS SHOWERS OF SPARKS

USE ONLY UNDER CLOSE ADULT SUPERVISION.
FOR OUTDOOR USE ONLY.
PLACE ON HARD OPEN SURFACE.
DO NOT HOLD IN HAND.
LIGHT FUSE AND GET AWAY.

Chapter 5 SHIPPING

5-1 General Requirements

5-1.1 All consumer fireworks imported into the United States must comply with certain regulations promulgated by the United States Department of Transportation. These regulations govern approval of fireworks for shipment, construction and testing of their shipping containers, and the marking and labeling of the containers.

NOTE: See **Appendix C** for a summary of these requirements. However, **Appendix C** is only a summary and not a complete discussion. Title 49 of the United States Codes should be consulted for complete information.

5-1.2 Product design, packaging, and case packing must produce a finished shipping case in which simultaneous explosion of all the items does not result from ignition of one item in the shipping case.

5-1.3 The package must not be so difficult to open that the contents might be damaged as a result of opening.

5-1.4 These items must be securely packaged for shipping in such a way that they are protected from moisture or physical damage during transportation and so that there is no risk of any of the contents escaping from the shipping case.

© 2009 American Fireworks Standards Laboratory. All Right Reserved.

AFSL 111

STANDARD FOR HAND-HELD SPARKLING DEVICES

OCTOBER 2017 EDITION

THIS STANDARD INCLUDES SPECIFICATIONS FOR THE FOLLOWING PRODUCTS:

Classification 2 – Dipped Sticks

Classification 39 – Sparklers – Wood Sticks

Classification 40 – Sparklers – Wire Sticks

Classification 41 – Morning Glories

© 2009 American Fireworks Standards Laboratory. All Right Reserved.

TABLE OF CONTENTS

Chapter 1 GENERAL

1-1 Introduction

1-2 Definitions

Chapter 2 PRODUCT DESIGN

2-1 General Requirements
- 2-1.1 Sharp Fragments
- 2-1.2 Impact Sensitivity
- 2-1.3 Similarity to Candy or Other Foods
- 2-1.4 Pyrotechnic Leakage
- 2-1.5 Prohibited Chemical
- 2-1.6 Assembly of Items
- 2-1.7 Limits for Pyrotechnic Composition
- 2-1.8 Requirements for Fuse
- 2-1.9 Handles
- 2-1.10 Continuous Flame
- 2-1.11 Visual Effects Only
- 2-1.12 Ignition Temperature
- 2-1.13 Slag or Molten Particles
- 2-1.14 Residue from Sparks
- 2-1.15 Packaging for devices exempt from Classification as Explosives
- 2-1.16 Name or Graphics Inconsistent with Labeling

2-2 Specific Requirements for Wire Sparklers

2-3 Specific Requirements for Devices with Wooden or Bamboo Sticks

Chapter 3 LABELING

3-1 General Requirements

3-2 Product-Specific Labeling

Chapter 4 SHIPPING

4-1 General Requirements

© 2009 American Fireworks Standards Laboratory. All Right Reserved.

STANDARD FOR HAND-HELD SPARKLING DEVICES

Chapter 1 GENERAL

1-1 INTRODUCTION

1-1.1 This Standard applies to the manufacture of the traditional category of hand held items (such as Dipped Sticks, Sparklers, and Morning Glories) consisting of a spark-producing pyrotechnic composition, either coated on a wire, wood, or bamboo stick, or contained in a tube which is consumed during functioning and typically attached to a stick. The unit of sale normally consists of a number of individual items boxed or packaged as a unit.

1-1.2 This Standard applies to devices intended primarily for use by the general public.

1-1.3 This Standard enables manufacturers to produce fireworks devices in accordance with applicable United States requirements for labeling, composition, and performance.

1-1.4 This Standard excludes items that are defined as “Specialty Items” in Section 1-2.10 of the Standard for Specialty Items.

1-2 DEFINITIONS

1-2.1 Chemical Composition - All pyrotechnic and explosive composition contained in a fireworks device (see also "Pyrotechnic Composition" and "Explosive" definitions).

1-2.2 Crackle - Spark-like bursts accompanied by a popping or snapping sound, produced by granules or flakes of pyrotechnic composition.

1-2.3 Pyrotechnic Composition - A chemical mixture that, on burning and without explosion, produces visible displays, bright lights, whistles, or motion.

1-2.4 Slag - A mass of molten particles generated by the burning of pyrotechnic material during the function of a fireworks device. Individual sparks produced as an intended effect of a device are not considered slag.

Chapter 2 PRODUCT DESIGN

2-1 GENERAL REQUIREMENTS

2-1.1 The construction of the item must be of such composition and design that no sharp fragments are produced upon functioning (or malfunctioning).

2-1.2 The finished item must not be impact sensitive or have a risk of premature ignition or explosion during transportation, handling, or normal operation.

© 2009 American Fireworks Standards Laboratory. All Right Reserved.

2-1.3 The finished item must not be designed or packaged in such a manner that it could be confused with candy or other foods if it is of a size or configuration that could be ingested.

2-1.4 The construction of the item must be adequate to prevent leakage or loss of the chemical composition at any time.

2-1.5 The chemical composition of the item must not contain prohibited chemical except as trace impurities.

NOTE: Prohibited and permitted chemicals are listed in **Appendix A**.

2-1.6 Items subject to this Standard must be assembled and packaged so as to prevent damage to the items during transportation, handling, and normal operation.

2-1.7 Limits for Pyrotechnic Composition Content

2-1.7.1 Hand-held sparkling devices which contain any chlorate must not contain more than 4 grams of pyrotechnic composition each, of which not greater than 15 percent (600mg.) is potassium, sodium or barium chlorate.

2-1.7.2 Hand-held sparkling devices which contain any perchlorate must not contain more that 5 grams (0.18 ounces) of pyrotechnic composition each.

2-1.7.3 Hand-held-sparkling devices that do not contain chlorate or perchlorate must not contain more than 100 grams (3.6 ounces) of pyrotechnic composition each.

NOTE: For hand-held sparkling devices exempt from classification as explosives, the chemical composition is limited to a combination of barium nitrate, potassium chlorate, potassium perchlorate, aluminium, magnalium, iron filings, and dextrine. No pure magnesium is permitted.

2-1.8 Fireworks devices subject to this Standard must have covered fuses that sucessfully resist ignition from open flames, hot surfaces and incendiary sparks when tested in accordance with test procedures found in PYR1129 – 2013 edition and any additional requirements specified by AFSL.

2-1.9 Handles

2-1.9.1 Items having a length of 25 centimeters (10 inches) or less overall, must have a handle at least 7.5 centimeters (3 inches) long.

2-1.9.2 Items having a length of more than 25 centimeters (10 inches) but less than 50 centimeters (20 inches) overall, must have a handle at least 10 centimeters (4 inches) long.

2-1.9.3 Items having a length of 50 centimeters (20 inches) or greater overall, must have a handle at least 15 centimeters (6 inches) long.

2-1.10 The pyrotechnic composition of items subject to this Standard must not produce a continuous flame beyond that required to sustain the effect.

2-1.11 Items subject to this Standard must produce only visual and crackle effects.

2-1.12 The ignition temperatures of items subject to this Standard must be

© 2009 American Fireworks Standards Laboratory. All Right Reserved.

sufficiently high that the item cannot be ignited by sparks from another hand-held sparkling device.

2-1.13 The pyrotechnic composition must produce a uniform display with no slag or other molten particles having the potential to cause burns or fires.

2-1.14 Spark residues from hand-held sparkling devices must be non-toxic and not physically injurious if ingested.

2-1.15 Hand-held sparkling devices exempt from classification as explosives (see **Appendix C - II**) must be packaged in an inner packaging that contains no more than 8 devices.

2-1.16 Items subject to this Standard must not bear a name or bear graphics suggesting a use of the product that is inconsistent with the cautionary labeling instructions.

2-2 SPECIFIC REQUIREMENTS FOR WIRE SPARKLERS

2-2.1 The wire ends must be formed, fused, or otherwise treated to eliminate sharp wire edges or burrs.

NOTE: The normal square-cut end of wires greater than 0.63 millimeter (0.025 inch) is considered acceptable.

2-2.2 When the Sparkler is operated horizontally, the wire must be adequate to prevent droop of the spent Sparkler by more than 50% of the length of the pyrotechnic coating.

2-2.3 When a Sparkler is waved in a horizontal motion through an arc of 90 degrees at a speed of two full cycles per second while functioning, the wire must not break or result in pieces of burning composition significantly larger than sparks falling from the wire.

2-3 SPECIFIC REQUIREMENTS FOR DIPPED STICKS OR SPARKLERS WITH WOODEN OR BAMBOO STICKS

2-3.1 Wooden or bamboo sticks must be treated or coated in such a manner that they will not continue to burn as a result of operation.

2-3.2 When a Dipped Stick or Sparkler is waved in a horizontal motion throught an arc of 90 degrees at a speed of two full cycles per second while functioning, the wooden or bamboo stick must not break or result in pieces of burning composition significantly larger than sparks falling from the stick.

2-3.3 When the Dipped Stick or Sparkler is operated horizontally, the stick must be adequate to prevent droop of the spent device by more than 50% of the length of the pyrotechnic coating.

Chapter 3 LABELING

3-1 GENERAL REQUIREMENTS

3-1.1 Individual items must bear cautionary labeling giving a signal word, statement of hazard(s) and instructions for proper use.

3-1.2 All cautionary labeling must be located prominently and in the English

© 2009 American Fireworks Standards Laboratory. All Right Reserved.

language in conspicuous and legible type in contrast by typography, layout or color with any other printed or graphic matter on the label.

NOTE: See **Appendix B** for specific details regarding placement, conspicuousness, prominence, and minimum type size requirements for cautionary labels.

3-1.3 The name and place of business of the manufacturer, distributor, packer, or seller must appear on the label of each product.

3-1.4 The common or usual name of the product must appear on the label of each product. For hand held sparkling devices that are exempt from classification as explosives (See **Appendix C - II**), the common or usual name must be: "Sparklers." For all other hand held sparkling devices, the common or usual name must be "Consumer Fireworks UN0336" or "Consumer Fireworks 1.4G."

3-2 PRODUCT-SPECIFIC LABELING

3-2.1 Hand-Held Sparkling Devices - Wire Stick (Classification 40)

CAUTION
FLAMMABLE

USE ONLY UNDER CLOSE ADULT SUPERVISION.
FOR OUTDOOR USE ONLY.
DO NOT TOUCH GLOWING WIRE.
HOLD IN HAND WITH ARM EXTENDED AWAY FROM BODY.
KEEP BURNING END OR SPARKS AWAY FROM WEARING APPAREL OR OTHER FLAMMABLE MATERIAL.
HOLD AND LIGHT ONLY ONE SPARKLER AT A TIME.
AFTER USE PLACE WIRE IN WATER.

3-2.2 Hand-Held Sparkling Devices - Wood Stick and Morning Glories (Classifications 39 and 41)

CAUTION
FLAMMABLE

USE ONLY UNDER CLOSE ADULT SUPERVISION.
FOR OUTDOOR USE ONLY.
DO NOT TOUCH HOT WOOD.
HOLD IN HAND WITH ARM EXTENDED AWAY FROM BODY.
KEEP BURNING END OR SPARKS AWAY FROM WEARING APPAREL OR OTHER FLAMMABLE MATERIAL.
HOLD AND LIGHT ONLY ONE DEVICE AT A TIME.
AFTER USE PLACE WOOD IN WATER.

Chapter 4 SHIPPING

4-1 GENERAL REQUIREMENTS

4-1.1 All consumer fireworks imported into the United States must comply with certain regulations promulgated by the United States Department of Transportation. These regulations govern approval of fireworks for shipment, construction and testing of their shipping containers, and the marking and labeling of the containers.

NOTE: See **Appendix C** for a summary of these requirements. However, **Appendix C** is only a summary and not a complete discussion. Title 49 of the United States Code should be consulted for complete information.

4-1.2 Product design, packaging, and case packing must produce a finished shipping case in which simultaneous explosion of all the

© 2009 American Fireworks Standards Laboratory. All Right Reserved.

items does not result from ignition of one item in the shipping case.

4-1.3 The package must not be so difficult to open that the contents might be damaged as a result of opening.

4-1.4 These items must be securely packaged for shipping in such a way that they are protected from moisture or physical damage during transportation and so that there is no risk of any of the contents escaping from the shipping case.

© 2009 American Fireworks Standards Laboratory. All Right Reserved.

AFSL 112

STANDARD FOR WHEELS

OCTOBER 2017 EDITION

THIS STANDARD INCLUDES SPECIFICATIONS FOR THE FOLLOWING PRODUCTS:

Classification 44 - Wheels - Axle

Classification 45 - Wheels - String

© 2009 American Fireworks Standards Laboratory. All Right Reserved.

TABLE OF CONTENTS

Chapter 1 GENERAL

1-1 Introduction

1-2 Definitions

Chapter 2 PRODUCT DESIGN

2-1 General Requirements
- 2-1.1 Sharp Fragments
- 2-1.2 Impact Sensitivity
- 2-1.3 Similarity to Candy or Other Foods
- 2-1.4 Pyrotechnic Leakage
- 2-1.5 Prohibited Chemicals
- 2-1.6 Assembly of Items
- 2-1.7 Burnout and Blowout
- 2-1.8 Limits for Pyrotechnic Composition
- 2-1.9 Requirements for Fuse
- 2-1.10 Reports in Wheels
- 2-1.11 Attachment of Driver
- 2-1.12 Maximum Flame Radius
- 2-1.13 Slag or Molten Particles
- 2-1.14 Name or graphics Inconsistent with Labeling

2-2 Specific Requirements for Axle-type Wheels
- 2-2.1 Nails
- 2-2.2 Free Spinning
- 2-2.3 Axle attachment

2-3 Specific Requirements for String-type Wheels
- 2-3.1 String Attachment

Chapter 3 LABELING

3-1 General Requirements

3-2 Product-Specific Labeling

© 2009 American Fireworks Standards Laboratory. All Right Reserved.

Chapter 4 SHIPPING

4-1 General Requirements

© 2009 American Fireworks Standards Laboratory. All Right Reserved.

STANDARD FOR WHEELS

Chapter 1 GENERAL

1-1 INTRODUCTION

1-1.1 This Standard applies to the manufacture of the traditional category of Wheel-like items, which are designed to spin on an axle or string and produce various effects. The unit of sale usually consists of a small number of individual Wheels boxed or packaged together but may be single units.

1-1.2 This Standard applies to devices intended primarily for use by the general public.

1-1.3 This Standard enables manufacturers to produce fireworks devices in accordance with applicable United States requirements for labeling, composition, and performance.

1-1.4 This Standard excludes items that are defined as "Specialty Items" in Section 1-2.10 of the Standard for Specialty Items.

1-2 DEFINITIONS

1-2.1 Blowout - The unintended release of a pressure effect from other than the intended orifice of the device.

1-2.2 Burnout - The unintended escape of flame through the wall of a pyrotechnic chamber during functioning of a fireworks device.

1-2.3 Chemical Composition - All pyrotechnic and explosive composition contained in a fireworks device (see also "Pyrotechnic Composition" and "Explosive Composition" definitions).

1-2.4 Driver - The propellant tube(s) attached to Wheels to "drive" or cause the device to spin.

1-2.5 Plug – The non-flammable material pressed or otherwise firmly affixed to the bottom of the pyrotechnic chamber of a fireworks device and intended to prevent failure of the assembly in a hazardous manner.

1-2.6 Pyrotechnic Composition – A chemical mixture that, on burning and without explosion, produces visible displays, bright lights, whistles, or motion.

1-2.7 Safety Fuse - A fuse consisting of a thread- wrapped powder train that has been coated with lacquer sufficient to prevent side ignition when tested in accordance with the AFSL test procedure for side ignition resistance.

1-2.8 Side Ignition - The ignition of a fuse at other than the tip when the side of the fuse is placed in direct contact with the glowing end of a burning cigarette.

1-2.9 Slag - A mass of molten particles generated by the burning of pyrotechnic material during the functioning of a fireworks device. Individual sparks produced as an intended effect of a device are not considered slag.

© 2009 American Fireworks Standards Laboratory. All Right Reserved.

1-2.10 Whistle - A small-tube device that produces a shrill noise resulting from the burning of pyrotechnic composition.

Chapter 2 PRODUCT DESIGN

2-1 General Requirements

2-1.1 The construction of the item must be of such composition and design that no sharp fragments are produced upon functioning (or malfunctioning).

2-1.2 The finished item must not be impact sensitive or have a risk of premature ignition or explosion during transportation, handling or normal operation.

2-1.3 The finished item must not be designed or packaged in such a manner that it could be confused with candy or other foods if it is of a size or configuration that could be ingested.

2-1.4 The construction of the item must be adequate to prevent leakage of the chemical composition at any time.

2-1.5 The chemical composition of the item must not contain prohibited chemicals except as trace impurities.

NOTE: Prohibited and permitted chemicals are listed in **Appendix A**.

2-1.6 Wheels must be assembled and packaged so as to prevent damage to the items during transportation, handling, and normal operation.

2-1.7 Driver tubes must be constructed of material that will allow the item to function without burnout or blowout.

2-1.8 Limits for Pyrotechnic Composition Content

2-1.8.1 Individual drivers must not contain more than 60 grams (2 ounces) total of pyrotechnic composition.

2-1.8.2 Wheels must not contain more than 200 grams (7.2 ounces) total of pyrotechnic composition each.

NOTE: Wheels for which EX Numbers were obtained prior to February 1, 1998 are permitted to have not more than 240 grams total pyrotechnic composition.

2-1.9 Requirements for Fuse

2-1.9.1 The fuse used as the lead into the body of the item must be only safety fuse or other fuse that has been protected to resist side ignition.

2-1.9.2 The fuse burning time from ignition of the tip of the fuse to ignition of the device must be at least 4 seconds but not more than 8 seconds.

2-1.9.3 Exposed fuse must resist side ignition for at least 3 seconds.

NOTE: Items that require a restricted orifice for proper functioning and contain less than 6 grams (0.2 ounces) of pyrotechnic composition do not require a fuse that is resistant to side ignition.

2-1.9.4 The entire fuse must be securely attached to the item so that it will support either the weight of the item plus 227

© 2009 American Fireworks Standards Laboratory. All Right Reserved.

grams (8 ounces) or double the weight of the item, whichever is less, without separation from the item.

2-1.9.5 For multi-effect or multi-tube items, the timing between effects (or tubes) must not exceed 10 seconds.

2-1.9.6 The location of the initiating fuse must be obvious or must be clearly identified on the exterior of the device.

2-1.9.7 Fireworks devices subject to this Standard must have covered fuses that sucessfully resist ignition from open flames, hot surfaces and incendiary sparks when tested in accordance with test procedures found in PYR1129 – 2013 edition and any additional requirements specified by AFSL.

2-1.10 Wheels must not contain reports.

2-1.11 Wheel drivers must be attached well enough to remain in place during transportation, handling, and normal operation.

2-1.12 The radius of the flame from an operating Wheel must not exceed 1 meter (39 inches) when measured from the center of the axle to the outside edge of the flame.

NOTE: Sparks are not considered to be flame effects.

2-1.13 The pyrotechnic composition must produce a uniform display with no slag or other molten particles which have the potential to cause burns or fires.

2-1.14 Items subject to this Standard must not bear a name or bear graphics suggesting a use of the product that is inconsistent with the cautionary labeling instructions.

2-2 SPECIFIC REQUIREMENTS FOR AXLE-TYPE WHEELS

2-2.1 Nails or other suitable fasteners must be provided for axle-type Wheels.

2-2.2 The nail or other fastener must allow free spinning of the Wheel while at the same time securely positioning the Wheel during operation.

2-2.3 Axles must remain securely attached to the device during transportation, handling, and normal operation.

2-3 SPECIFIC REQUIREMENTS FOR STRING-TYPE WHEELS

2-3.1 String-type Wheels must have a securely attached string so that the string remains attached to the device during normal operation.

Chapter 3 LABELING

3-1 GENERAL REQUIREMENTS

3-1.1 Individual items must bear cautionary labeling giving a signal word, statement of hazard(s), and instructions for proper use.

3-1.2 All cautionary labeling must be located prominently and in the English language in conspicuous and legible type in

© 2009 American Fireworks Standards Laboratory. All Right Reserved.

contrast by typography, layout or color with any other printed or graphic matter on the label.

NOTE: See **Appendix B** for specific details regarding placement, conspicuousness, prominence, and minimum type size requirements for cautionary labels.

3-1.3 The name and place of business of the manufacturer, packer, distributor, or seller must appear on the label of each product.

3-1.4 The common or usual name of the product, such as "UN0336 Consumer Fireworks" or "Consumer Fireworks 1.4G" must appear on the label of each product.

3-2 PRODUCT-SPECIFIC LABELING

3-2.1 Axle-type Wheels
(Classification 44)

CAUTION
EMITS SHOWERS OF SPARKS

USE ONLY UNDER CLOSE ADULT SUPERVISION.
FOR OUTDOOR USE ONLY.
ATTACH SECURELY BY MEANS OF A NAIL THROUGH THE HOLE.
DO NOT HOLD IN HAND.
LIGHT FUSE AND GET AWAY.
BE SURE THAT THE AREA WHERE THE WHEEL WILL SPIN SPARKS IS CLEAR OF SPECTATORS AND COMBUSTIBLE MATERIALS.

3-2.2 String-type Wheels
(Classification 45)

CAUTION
EMITS SHOWERS OF SPARKS

USE ONLY UNDER CLOSE ADULT SUPERVISION.
FOR OUTDOOR USE ONLY.
ATTACH STRING TO OBJECT SO THAT ITEM HANGS FREELY.
DO NOT HOLD IN HAND.
LIGHT FUSE AND GET AWAY.
BE SURE THAT THE AREA WHERE THE WHEEL WILL SPIN SPARKS IS CLEAR OF SPECTATORS AND COMBUSTIBLE MATERIALS.

Chapter 4 SHIPPING

4-1 GENERAL REQUIREMENTS

4-1.1 All consumer fireworks must comply with certain regulations promulgated by the United States Department of Transportation. These regulations govern approval of fireworks for shipment, construction and testing of their shipping containers, and the marking and labeling of the containers.

NOTE: See **Appendix C** for a summary of these requirements. However, **Appendix C** is only a summary and not a complete discussion. Title 49 of the United States Code should be consulted for complete information.

4-1.2 Product design, packaging, and case packing must produce a finished shipping case in which simultaneous explosion of all the items does not result from ignition of one item in the shipping case.

© 2009 American Fireworks Standards Laboratory. All Right Reserved.

4-1.3 The package must not be so difficult to open that the contents might be damaged as a result of opening.

4-1.4 These items must be securely packaged for shipping in such a way that they are protected from moisture or physical damage during transportation and so that there is no risk of any of the contents escaping from the shipping case

© 2009 American Fireworks Standards Laboratory. All Right Reserved.

AFSL 113

STANDARD FOR GIRANDOLAS

OCTOBER 2017 EDITION

THIS STANDARD INCLUDES SPECIFICATIONS FOR THE FOLLOWING PRODUCTS:

AFSL Classification 47 - Girandola

© 2009 American Fireworks Standards Laboratory. All Right Reserved.

TABLE OF CONTENTS

Chapter 1 GENERAL

1-1 Introduction

1-2 Definitions

Chapter 2 PRODUCT DESIGN

2-1 General Requirements
- 2-1.1 Sharp Fragments
- 2-1.2 Sharp Edges and Points
- 2-1.3 Impact Sensitivity
- 2-1.4 Similarity to Candy or Other Foods
- 2-1.5 Pyrotechnic Leakage
- 2-1.6 Prohibited Chemicals
- 2-1.7 Assembly of Items
- 2-1.8 Burnout and Blowout
- 2-1.9 Limits of Chemical Composition
- 2-1.10 Total Chemical Composition
- 2-1.11 Report Limit
- 2-1.12 Simultaneous Explosion of Reports
- 2-1.13 Requirements for Fuse
- 2-1.14 Secure Attachment of Flight Stablizing Features
- 2-1.15 Secure Attachment of Launch Rods
- 2-1.16 Prohibition on Reloadable Components
- 2-1.17 Name or Graphics Inconsistent with Labeling

Chapter 3 PERFORMANCE

3-1 General Requirements
- 3-1.1 Primary Effects Height Requirement
- 3-1.2 Primary Effects Minimum Distance from Ground
- 3-1.3 Flaming Debris
- 3-1.4 Minimum Height for Primary Effect
- 3-1.5 Flight Trajectory
- 3-1.6 Timing Between Effects

© 2009 American Fireworks Standards Laboratory. All Right Reserved.

Chapter 4 LABELING

4-1 General Requirements

4-2 Product-Specific Labeling

Chapter 5 SHIPPING

5-1 General Requirements

© 2009 American Fireworks Standards Laboratory. All Right Reserved.

STANDARD FOR GIRANDOLAS

Chapter 1 GENERAL

1-1 INTRODUCTION

1-1.1 This Standard applies to the manufacture of the category of items known as Girandola designed to be launched overhead, producing visual or audible effects near the peak of trajectory. The unit of sale usually consists of several fully assembled units packaged together.

1-1.2 This Standard applies to devices intended primarily for use by the general public.

1-1.3 This Standard enables manufacturers to produce fireworks devices in accordance with applicable United States requirements for labeling, composition, and performance.

1-1.4 This Standard excludes items that are defined as “Specialty Items” in Section 1-2.10 of the Standard for Specialty Items.

1-2 DEFINITIONS

1-2.1 Blowout - The unintended release of a pressure effect from other than the intended orifice of the device.

1-2.2 Burnout - The unintended escape of flame through the wall of a pyrotechnic chamber during functioning of a fireworks device.

1-2.3 Chemical Composition - All pyrotechnic and explosive composition contained in a fireworks device. (See also "Pyrotechnic Composition" and "Explosive" definitions).

1-2.4 Driver – A rocket motor used for propelling a Girandola causing it to rise into the air.

1-2.5 Explosive Composition - Any chemical compound or mixture, the primary purpose of which is functiion by explosion, producing an audible effect in a fireworks device.

1-2.6 Girandola – A horizontal wheel with angled drivers that rotates quickly and rises into the air. Once it reaches it’s peak, it usually produces a visual and/or audible effect.

1-2.7 Primary Visual or Audible Effect(s) - The major effect(s) for a fireworks device, such as a report, a shower of sparks, or an aerial flaming ball. The lift function of the motor (propellant) is not considered to be a primary effect.

1-2.8 Pyrotechnic Composition - A chemical mixture that, on burning and without explosion, produces visible displays, bright lights, whistles, or motion.

1-2.9 Report - A loud noise or "bang."

1-2.10 Safety Fuse - A fuse consisting of a thread-wrapped powder train that has been coated with lacquer sufficient to prevent side ignition when tested in accordance with the AFSL test procedure for side ignition resistance.

1-2.11 Side Ignition - The ignition of a fuse at other than the tip when the side of the fuse is placed in direct contact with the glowing end of a burning cigarette.

Chapter 2 PRODUCT DESIGN

2-1 GENERAL REQUIREMENTS

2-1.1 These items must be constructed of materials that do not produce sharp fragments when the item functions.

2-1.2 These items must be constructed without sharp edges or sharp points.

2-1.3 The finished item must not be impact sensitive or have a risk of premature ignition or explosion during transportation, handling, or normal operation.

2-1.4 The finished item must not be designed or packaged in such a manner that it could be confused with candy or other foods if it is of a size or configuration that could be ingested.

2-1.5 The construction of the item must be adequate to prevent leakage of the chemical composition at any time.

2-1.6 The chemical composition of the item must not contain prohibited chemicals except as trace impurities.

NOTE: Prohibited and permitted chemicals are listed in **Appendix A**.

2-1.7 Devices subject to this Standard must be assembled and packaged so as to prevent damage during transportation, handling, and normal operation.

2-1.8 The pyrotechnic chamber in devices subject to this Standard must be constructed in a manner that allows normal functioning without burnout or blowout.

2-1.9 The total amount of chemical composition for Girandolas including propellant, primary and any other effects, must not exceed 20 grams per driver and 60 grams per Girandola unit .

2-1.10 Any girandola item consisting of more than one girandola unit must not contain in excess of 200 grams (7.2 oz) total chemical composition.

2-1.11 Explosive components of Girandolas intended to produce reports must not contain more than 2 grains (130 mg) of explosive composition each.

2-1.12 Report charges must be designed to prevent simultaneous explosion.

2-1.13 Requirements For Fuse

2-1.13.1 The fuse used as the lead into the body of the item must be only safety fuse or other fuse that has been protected to resist side ignition.

2-1.13.2 The location of the fuse must be obvious or be clearly identified on the exterior of the device.

2-1.13.3 The fuse burning time from ignition of the tip of the fuse to ignition of the device must be at least 4 seconds but not more than 8 seconds.

© 2009 American Fireworks Standards Laboratory. All Right Reserved.

2-1.13.4 Exposed fuse must resist side ignition for at least 3 seconds.

2-1.13.5 The entire fuse must be securely attached to the item so that it will support the weight of the item plus 227 grams (8 ounces) or double the weight of the item, whichever is less, without separating from the item.

2-1.13.6 Fireworks devices subject to this Standard must have covered fuses that sucessfully resist ignition from open flames, hot surfaces and incendiary sparks when tested in accordance with test procedures found in PYR1129 – 2013 edition and any additional requirements specified by AFSL.

2-1.14 Flight stabilizing features such as drivers, wings, or fins must be securely attached to the item so as to prevent them from being damaged or detached during transportation, handling, and normal operation.

2-1.15 A launch rod is required for girandolas. Launch rod must be straight and rigid and securely attached to the base so as to prevent them from being damaged, or detached during transportation, handling and normal operation.

2-1.16 Devices subject to this standard must not contain reloadable components or features.

2-1.17 Items subject to this Standard must not bear a name or bear graphics suggesting a use of the product that is inconsistent with the cautionary labeling instructions.

Chapter 3 PERFORMANCE

3-1 General Requirements

3-1.1 Primary effects, visual or audible, must take place at or near the peak of the trajectory of the device.

3-1.2 Primary effects must be extinguished within 5 meters (16 feet) of the ground.

NOTE: The lift function of the motor (the propellant) is not considered to be a primary effect.

3-1.3 Flaming debris from the device must be extinguished above 3 meters (10 feet) from the ground.

3-1.4 The ignited device, when launched according to the instructions, must reach a height of not less than 15 meters (49 feet).

3-1.5 The flight direction of Girandolas launched straight overhead must be within 22 ½ degrees in any direction from the vertical up to the minimum height of 15 meters (49 ft.)

NOTE: See Figure 2 of **Appendix H** for a schematic diagram of trajectory requirements for Girandolas. (Change **Appendix H** to include girandolas.)

3-1.6 For multiple effects items the timing between effects must not exceed 10 seconds.

© 2009 American Fireworks Standards Laboratory. All Right Reserved.

Chapter 4 LABELING

4-1 GENERAL REQUIREMENTS

4-1.1 Individual items must bear cautionary labeling giving a signal word, statement of hazard(s), and instructions for proper use on the principal display panel(s) of the item.

4-1.2 All cautionary labeling must be located prominently and in the English language in conspicuous and legible type in contrast by typography, layout or color with any other printed or graphic matter on the label.

4-1.3 The name and place of business of the manufacturer, packer, distributor, or seller must appear on the label of each product.

NOTE: See **Appendix B** for specific details regarding placement, conspicuousness, prominence, and minimum type size requirements for cautionary labels.

4-1.4 The common or usual name of the product , such as "Consumer Fireworks UN0336" or Consumer Fireworks 1.4G," must appear on the label of each product.

4-2 PRODUCT-SPECIFIC LABELING

4-2.1 Girandola with Report

WARNING
SHOOTS UPWARD
EMITS SHOWERS OF SPARKS WITH REPORT

USE ONLY UNDER CLOSE ADULT SUPERVISION.
FOR OUTDOOR USE ONLY.
PLACE ON HARD OPEN SURFACE FREE OF OVERHEAD OBSTRUCTIONS.
DO NOT HOLD IN HAND.
LIGHT FUSE AND GET AWAY.

4-2.2 Girandola without Report.

WARNING
SHOOTS UPWARD
EMITS SHOWERS OF SPARKS

USE ONLY UNDER CLOSE ADULT SUPERVISION.
FOR OUTDOOR USE ONLY.
PLACE ON HARD OPEN SURFACE FREE OF OVERHEAD OBSTRUCTIONS.
DO NOT HOLD IN HAND.
LIGHT FUSE AND GET AWAY.

Chapter 5 SHIPPING

5-1 GENERAL REQUIREMENTS

5-1.1 All consumer fireworks imported into the United States must comply with certain regulations promulgated by the United States Department of Transportation. These regulations govern approval of fireworks for shipment, construction and testing of their packaging (shipping case), and the marking and labeling of the containers.

NOTE: See **Appendix C** for a summary of these requirements. However, **Appendix C.** is only a summary and not a complete discussion. Title 49 of the United States Codes should be consulted for complete information.

5-1.2 Product design, packaging, and case packing must produce a finished shipping case in which simultaneous explosion of all the items does not result from ignition of one item in the shipping case.

5-1.3 The package must not be so difficult to open that the contents might be damaged as a result of opening.

© 2009 American Fireworks Standards Laboratory. All Right Reserved.

5-1.4 These items must be securely packaged for shipping in such a way that they are protected from moisture or physical damage during transportation and so that there is no risk of any of the contents escaping from the shipping case.

© 2009 American Fireworks Standards Laboratory. All Right Reserved.

AFSL 114

STANDARD FOR CRACKLING STRIPS

AUGUST 2017 EDITION

AFSL Classification 51 – Crackling Strips

© 2009 American Fireworks Standards Laboratory. All Right Reserved.

TABLE OF CONTENTS

Chapter 1 GENERAL

1-1 Introduction

1-2 Definitions

Chapter 2 PRODUCT DESIGN

2-1 General Requirements
- 2-1.1 Sharp Fragments
- 2-1.2 Impact Sensitivity
- 2-1.3 Similarity to Candy or Other Foods
- 2-1.4 Pyrotechnic Leakage
- 2-1.5 Prohibited Chemical
- 2-1.6 Assembly of Items
- 2-1.7 Limits for Pyrotechnic Composition
- 2-1.8 Limits for Pyrotechnic Composition for Finale
- 2-1.9 Timing Between Device and Finale
- 2-1.10 Requirements for Fuse
- 2-1.11 No Effects Except Sparks and Crackling Sound
- 2-1.12 Limit on Travel Distance for Sparks
- 2-1.13 Prohibition on Friction-Ignited Items

2-2 Requirements for Packaging
- 2-2.1 Ignition Resistant Retail Packaging
- 2-2.2 Pyrotechnic Composition Limit for Retail Package

Chapter 3 LABELING

3-1 General Requirements

3-2 Product-Specific Labeling

Chapter 4 SHIPPING

4-1 General Requirements

© 2009 American Fireworks Standards Laboratory. All Right Reserved.

STANDARD FOR CRACKLING STRIPS

Chapter 1 GENERAL

1-1 INTRODUCTION

1-1.1 This Standard applies to the manufacture of the traditional category of fireworks designed to produce sparks and crackling effects at ground level. The unit of sale normally consists of items individully fused and packaged as a unit.

1-1.2 This Standard applies to devices intended primarily for use by the general public.

1-1.3 This Standard enables manufacturers to produce fireworks devices in accordance with applicable United States requirements for labeling, composition and performance.

1-1.4 This Standard excludes items that are defined as “Specialty Items” in Section 1-2.10 of the Standard for Specialty Items.

1-2 DEFINITIONS

1-2.1 Chemical Composition - All pyrotechnic and explosive composition contained in a fireworks device (see also "Pyrotechnic Composition" and "Explosive Composition" definitions).

1-2.2 Crackling Sparks - A visual effect that consists of spark-like bursts and bright light, accompanied by a popping or snapping sound, that is produced by granules or flakes of pyrotechnic composition.

1-2.3 Crackling Strip - A linear fireworks device that consists of small granules of pyrotechnic composition adhered to and encased in a paper wrapping that produces crackling sparks as its primary pyrotechnic effects.

1-2.4 Crackling Finale (Head Bomb) - A collection of crackling spark granules wrapped in paper and located at the end of a Crackling Strip device. These granules, if present in a device, produce a rapid display of crackling sparks as the finale of the device.

1-2.5 Explosive Composition - Any chemical compound or mixture, the primary purpose of which is to function by explosion, producing an audible effect in a fireworks device.

1-2.6 Pyrotechnic Composition - A chemical mixture that, on burning and without explosion, produces visible displays, bright lights, whistles, or motion.

1-2.7 Safety Fuse - A fuse consisting of a thread-wrapped powder train that has been coated with lacquer sufficient to prevent side ignition when tested in accordance with the AFSL test procedure for side ignition resistance.

1-2.8 Side Ignition - The ignition of a fuse at other than the tip when the side of the fuse is placed in direct contact with the glowing end of a burning cigarette.

© 2009 American Fireworks Standards Laboratory. All Right Reserved.

Chapter 2 PRODUCT DESIGN

2-1 General Requirements

2-1.1 The construction of the item must be of such composition and design that no sharp fragments are produced upon functioning (or malfunctioning).

2-1.2 The finished item must not be impact sensitive or have a risk of premature ignition or explosion during transportation, handling, or normal operation.

2-1.3 The finished item must not be designed or packaged in such a manner that it could be confused with candy or other foods if it is of a size or configuration that could be ingested.

2-1.4 The construction of the item must be adequate to prevent leakage of the chemical composition at any time.

2-1.5 The chemical composition of the item must not contain prohibited chemicals except as trace impurities.

NOTE: Prohibited and permitted chemicals are listed in **Appendix A**.

2-1.6 The finished item must be assembled and packaged so as to prevent damage to the item during transportation, handling and normal operations.

2-1.7 The total pyrotechnic composition for a single device must not exceed 60 grams (exclusive of fuse).

2-1.8 The total weight of pyrotechnic composition per finale must not exceed 10 grams.

2-1.9 The delay between the end of the Crackling Strip and the beginning of the crackling finale must not exceed 3 seconds.

2-1.10 Requirements for Fuse

2-1.10.1 The fuse used as the lead into the body of the item must be only safety fuse or other fuse that has been protected to resist side ignition.

2-1.10.2 The fuse burning time from ignition of the tip of the fuse to ignition of the device must be at least 4 seconds but not more than 8 seconds.

2-1.10.3 Exposed fuses must resist side ignition for at least 3 seconds.

2-1.10.4 The entire fuse must be securely attached to the item so that it will support either the weight of the item plus 227 grams (8 ounces) or double the weight of the item, whichever is less, without separation from the item.

2-1.10.5 The location of the fuse must be obvious or must be clearly identified on the exterior of the Crackling Strip.

2-1.10.6 Devices subject to this Standard must contain only one ignition fuse. Additional fuses, points of ignition, openings for fuse insertion, or points for ignition transfer are not permitted.

2-1.10.7 Fireworks devices subject to this Standard must have covered fuses that sucessfully resist ignition from open flames, hot surfaces and incendiary sparks

© 2009 American Fireworks Standards Laboratory. All Right Reserved.

when tested in accordance with test procedures found in PYR1129 – 2013 edition and any additional requirements specified by AFSL.

2-1.11 Crackling Strips must not contain any pyrotechnic effects other than the explosive composition designed to produce sparks and a crackling sound.

2-1.12 Sparks expelled from a Crackling Strip device must not travel more that 2 meters in any direction from the device.

2-1.13 Crackling Strips must not be capable of ignition by friction.

2-2 REQUIREMENTS FOR PACKAGING

2-2.1- Crackling Strips must be contained in a retail package that resists ignition from pyrotechnic sparks.

NOTE: See **Appendix K** for the test procedure for Retail Package Ignition Resistance.

2-2.2– The total pyrotechnic composition in a retail package must not exceed 60 grams (exclusive of fuse).

Chapter 3 LABELING

3-1 GENERAL REQUIREMENTS

3-1.1 Packages of Crackling Strips must bear cautionary labeling giving a signal word, statement of hazard(s), and instructions for proper use.

3-1.2 All cautionary labeling must be located prominently and in the English language in conspicuous and legible type in contrast by typography, layout or color with any other printed or graphic matter on the label.

NOTE: See **Appendix B** for specific details regarding placement, conspicuousness, prominence, and minimum type size requirements for cautionary labels.

3-1.3 The name and place of business of the manufacturer, packer, seller, or distributor must appear on the label of each product.

3-1.4 The common or usual name of the product, such as "Consumer Fireworks UN0336" or "Consumer Fireworks 1.4G," must appear on the label of each product.

3-2 PRODUCT-SPECIFIC LABELING FOR CRACKLING STRIPS

3-2.1 Crackling Strips.

CAUTION
EMITS CRACKLING SPARKS

USE ONLY UNDER CLOSE ADULT SUPERVISION.
FOR OUTDOOR USE ONLY.
PLACE CRACKLING STRIP ON THE GROUND.
DO NOT PLACE ON DRY GRASS OR OTHER COMBUSTIBLE MATERIAL.
LIGHT FUSE AND GET AWAY.
NEVER ATTEMPT TO RELIGHT A FUSE.

© 2009 American Fireworks Standards Laboratory. All Right Reserved.

3-2.2 Crackling Strip Rolls

CAUTION
EMITS CRACKLING SPARKS

USE ONLY UNDER CLOSE ADULT SUPERVISION.
FOR OUTDOOR USE ONLY.
DO NOT HOLD IN HAND.
REMOVE FROM PACKAGING AND UNROLL BEFORE USE.
PLACE CRACKLING STRIP ON THE GROUND.
DO NOT PLACE ON DRY GRASS OR OTHER COMBUSTIBLE MATERIAL.
LIGHT FUSE AND GET AWAY.
NEVER ATTEMPT TO RELIGHT A FUSE.

3-2.3 Hanging Crackling Strip Rolls

CAUTION
EMITS CRACKLING SPARKS

USE ONLY UNDER CLOSE ADULT SUPERVISION.
FOR OUTDOOR USE ONLY.
DO NOT HOLD IN HAND.
REMOVE FROM PACKAGING AND UNROLL BEFORE USE.
HANG USING PROVIDED LOOP.
DO NOT HANG NEAR COMBUSTIBLE MATERIAL.
LIGHT FUSE AND GET AWAY.
NEVER ATTEMPT TO RELIGHT A FUSE.

Chapter 4 SHIPPING

4-1 GENERAL REQUIREMENTS

4-1.1 All consumer fireworks imported into the United States must comply with certain regulations promulgated by the United States Department of Transportation. These regulations govern approval of fireworks for shipment, construction and testing of their shipping containers, and the marking and labeling of the containers.

NOTE: See **Appendix C** for a summary of these requirements. However, **Appendix C** is only a summary and not a complete discussion. Title 49 of the United States Code should be consulted for complete information.

4-1.2 Product design, packaging, and case packing must produce a finished shipping case in which simultaneous explosion of all the items does not result from ignition of one item in the shipping case.

4-1.3 The package must not be so difficult to open that the contents might be damaged as a result of opening.

4-1.4 These items must be securely packaged for shipping in such a way that they are protected from moisture or physical damage during transportation and so that there is no risk of any of the contents escaping from the shipping case.

© 2009 American Fireworks Standards Laboratory. All Right Reserved.

AFSL 115

STANDARD FOR MISCELLANEOUS GROUNDITEMS

OCTOBER 2017 EDITION

THIS STANDARD INCLUDES SPECIFICATIONS FOR THE FOLLOWING PRODUCTS:

Classification 52 – Crackling Balls

Classification 53 – Crackling Tubes

Classification 54 – Flashers (Strobes)

Classification 55 – Sparkler Trees

© 2009 American Fireworks Standards Laboratory. All Right Reserved.

TABLE OF CONTENTS

Chapter 1 GENERAL

1-1 Introduction

1-2 Definitions

Chapter 2 PRODUCT DESIGN

1-3 General Requirements
- 1-3.1 Sharp Fragments
- 1-3.2 Impact Sensitivity
- 1-3.3 Similarity to Candy or Other Foods
- 1-3.4 Pyrotechnic Leakage
- 1-3.5 Prohibited Chemicals
- 1-3.6 Assembly of Items
- 1-3.7 Burnout and Blowout
- 1-3.8 Limits of Chemical Composition
- 1-3.9 Requirements for Fuse
- 1-3.10 Performance
- 1-3.11 Name and Graphics Inconsistent with Labeling

1-4 Specific Requirement for Base Items

1-5 Specific Requirements for Wire Sparkler Trees

Chapter 3 LABELING

1-6 General Requirements

1-7 Product-Specific Labeling

Chapter 4 SHIPPING

1-8 General Requirement

© 2009 American Fireworks Standards Laboratory. All Right Reserved.

STANDARD FOR MISCELLANEOUS ITEMS

Chapter 1 GENERAL

1-1 INTRODUCTION

1-1.1 This Standard applies to the manufacture of the traditional category or fireworks designed to produce crackling/flashing/strobe light effect.

1-1.2 This Standard applies to devices intended primarily for use by the general public.

1-1.3 This Standard enables manufacturers to produce fireworks devices in accordance with applicable United States requirements for labeling, composition, and performance.

1-1.4 This Standard excludes items that are defined as “Specialty Items” in Section 1-2.9 of the Standard for Specialty Items.

1-2 DEFINITIONS

1-2.1 Base - The platform to which one or more tubes of a fireworks device are attached to provide a stable platform for functioning of the item.

1-2.2 Blowout – The unintended release of a pressure effect from other than the intended orifice of a fireworks devices.

1-2.3 Burnout – The unintended escape of flame through the wall of a pyrotechnic chamber during functioning of a fireworks device.

1-2.4 Chemical Composition - All pyrotechnic composition contained in a fireworks device (see also "Pyrotechnic Composition").

1-2.5 Crackle – Spark-like bursts accompanied by a popping or snapping sound, produced by granules or flakes of pyrotechnic composition.

1-2.6 Crackling Ball - A device consist of a spherical ball that contains small granules (micro-stars) of chemical composition that produce sparks and/or a crackling effect.

1-2.7 Crackling Tree – A device consists of a tube that contains small granules (micro-stars) of chemical composition that produce sparks and/or a crackling effect.

1-2.8 Flasher (Strobe) – A device containing a chemical composition that produces a crackling/flashing/strobe light effect.

1-2.9 Pyrotechnic Composition - A chemical mixture that, on burning and without explosion, produces visible or brilliant displays of bright lights.

© 2009 American Fireworks Standards Laboratory. All Right Reserved.

1-2.10 Safety Fuse - A fuse consisting of a thread-wrapped black powder train that has been coated with lacquer sufficient to prevent side ignition when tested in accordance with the AFSL test procedure of side ignition resistance.

1-2.11 Side Ignition - The ignition of a fuse at a point other than the tip when the side of the fuse is placed in direct contact with the glowing tip on a lighted cigarette.

1-2.12 Sparkler Tree – A device consists of multiple pieces of metal wire coated with a chemical composition that when lit produces a shower of sparks, a colored flame and/or a crackling effect.

Chapter 2 PRODUCT DESIGN

2-1 GENERAL REQUIREMENTS

2-1.1 The construction of the item must be of such composition and design that no sharp fragments are produced upon functioning (or malfunctioning).

2-1.2 The finished item must not be impact sensitive or have a risk of premature ignition or explosion during transportation, handling, or normal operation.

2-1.3 The finished item must not be designed or packaged in such a manner that it could be confused with candy or other foods if it is of a size or configuration that could be ingested.

2-1.4 The construction of the item must be adequate to prevent leakage or loss of the chemical composition at any time.

2-1.5 The chemical composition of the item must not contain prohibited substances except as trace impurities.

NOTE: Prohibited substances are listed in **Appendix A.**

2-1.6 Items subject to this Standard must be assembled and packaged so as to prevent damage to the items during transportation, handling and normal operation.

2-1.7 The pyrotechnic chamber of a fireworks device subject to this Standard must be constructed in a manner to allow functioning in a normal manner without burnout or blowout.

NOTE: Flashers (Strobes) are exempt from this requiremernt.

2-1.8 Limits for Chemical Composition Content

2-1.8.1 Crackling Balls and Crackling Tubes must not contain more than 20 grams (0.71 ounces) of total chemical composition.

2-1.8.2 Crackling Balls and Crackling Tubes must not exceed 75 grams (2.66 ounces) per inner package.

2-1.8.3 Flashers (Strobes) must not contain more than 5 grams (0.18 ounces) of total chemical composition.

© 2009 American Fireworks Standards Laboratory. All Right Reserved.

2-1.8.4 Flashers (Strobes) must not exceed 60 grams (2.13 ounces) per inner package.

2-1.8.5 Sparkler Trees that contain any Chlorate must not contain more than 4 grams (0.14 ounces) of pyrotechnic composition each, of which not greater than 15 percent (600 mg) is potassium, sodium or barium chlorate.

2-1.8.6 Sparkler Trees that contain any Perchlorate must not contain more than 5 grams (0.18 ounces) of pyrotechnics composition each.

2-1.8.7 Sparkler Trees that do not contain chlorate or perchlorate must not contain more than 25 grams (0.88 ounces) of pyrotechnic composition each.

2-1.9 Requirement for Fuse

2-1.9.1 The fuse used as the lead into the body of the item must be only safety fuse or other fuse that has been protected to resist side ignition.

2-1.9.2 Exposed fuse must resist side ignition for at least 3 seconds.

2-1.9.3 The fuse burning time from ignition of the tip of the fuse to ignition of the device must be at least 4 seconds but not more than 8 seconds.

2-1.9.4 The entire fuse must be securely attached to the item so that it will support either the weight of the item plus 227 grams (8 ounces), or double the weight of the item, whichever is less, without separation from the item.

2-1.9.5 The location of the fuse must be obvious or be clearly identified on the exterior packaging of the device.

2-1.9.6 Fireworks devices subject to this Standard must have covered fuses that sucessfully resist ignition from open flames, hot surfaces and incendiary sparks when tested in accordance with test procedures found in PYR1129 – 2013 edition and any additional requirements specified by AFSL.

NOTE: Sparkler Trees are exempt from the all fuse requirements.

2-1.10 Performance

2-1.10.1 Device shall only produce sparks, a colored flame and/or a crackling effect.

2-1.10.2 Effects propelled from Crackling Balls, Crackling Tubes and Flashers (Strobes) must not travel an initial distance in the air greater than 2 meters in any direction.

2-1.10.3 Crackling Balls and Crackling Tubes must not catch fire as a result of operation.

2-1.10.4 The pyrotechnic composition of Sparkler Trees must not produce a continuous flame beyond that required to sustain the effect.

2-1.10.5 The ignition temperatures of Sparkler Trees must be sufficiently high that the item cannot be ignited by sparks from another Sparkler Tree.

© 2009 American Fireworks Standards Laboratory. All Right Reserved.

2-1.10.6 Spark residues from Sparkler Trees must be non-toxic and not physically injurious if ingested.

2-1.11 Items subject to this Standard must not bear a name or bear graphics suggesting a use of the product that is inconsistent with the cautionary labeling instructions.

2-2 SPECIFIC REQUIREMENTS FOR BASE ITEMS

2-2.1 The base or bottom of devices that are operated in a standing or upright position must have the minimum horizontal dimension or the diameter of the base equal to at least one-third of the height of the device including any base or cap affixed thereto.

2-2.2 In addition, any item designed to operate on a base must remain upright when tilted 12 degrees from horizontal against its shortest base dimension.

NOTE: Crackling Balls, Crackling Tubes and Strobes are exempt from the base requirement.

2-3 SPECIFIC REQUIREMENTS FOR WIRE SPARKLER TREES

2-3.1 The wire ends must be formed, fused, or otherwise treated to eliminate sharp wire edges or burns.

NOTE: The normal square-cut end of wires greater than 0.61 millimeter (0.025 inch) is considered acceptable.

Chapter 3 LABELING

3-1 GENERAL REQUIREMENTS

3-1.1 Individual items must bear cautionary labeling giving a signal word, statement of hazard(s) and instructions for proper use.

3-1.2 All cautionary labeling must be located prominently and in the English language in conspicuous and legible type in contrast by typography, layout or color with any other printed or graphic matter on the label.

NOTE: See **Appendix B** for specific details regarding placement, conspicuousness, prominence, and minimum type size requirements for cautionary labels.

3-1.3 The name and place of business of the manufacturer, packer, distributor, or seller must appear on the label of each product.

3-1.4 The common or usual name of the product must appear on the label of each product. All items subject to this Standard, the common or usual name must be "Consumer Fireworks UN0336" or "Consumer Fireworks 1.4G".

3-2 PRODUCT-SPECIFIC LABELING

3-2.1 Crackling Balls
(Classification 52)

CAUTION
EMITS CRACKLING SPARKS

USE ONLY UNDER CLOSE ADULT SUPERVISION.
FOR OUTDOOR USE ONLY.
DO NOT HOLD IN HAND.
PLACE ON HARD, LEVEL SURFACE
LIGHT FUSE AND GET AWAY.

© 2009 American Fireworks Standards Laboratory. All Right Reserved.

3-2.2 Crackling Tubes
(Classification 53)

CAUTION
EMITS CRACKLING SPARKS

USE ONLY UNDER CLOSE ADULT SUPERVISION.
FOR OUTDOOR USE ONLY.
DO NOT HOLD IN HAND.
PLACE ON HARD, LEVEL SURFACE
LIGHT FUSE AND GET AWAY.

3-2.3 Flashers (Strobes)
(Classification 54)

CAUTION
EMITS FLASHES OF LIGHT AND CRACKLING SPARKS

USE ONLY UNDER CLOSE ADULT SUPERVISION
FOR OUTDOOR USE ONLY.
DO NOT HOLD IN HAND.
PLACE ON HARD, LEVEL SURFACE.
LIGHT FUSE AND GET AWAY.

3-2.4 Sparkler Trees
(Classification 55)

CAUTION
EMITS SHOWERS OF SPARKS

USE ONLY UNDER CLOSE ADULT SUPERVISION
FOR OUTDOOR USE ONLY.
DO NOT HOLD IN HAND.
DO NOT TOUCH GLOWING WIRE.
PLACE ON LEVEL SURFACE.
LIGHT IGNITION TIP AND GET AWAY.
AFTER USE PLACE DEVICE IN WATER.

Chapter 4 SHIPPING

4-1 GENERAL REQUIREMENTS

4-1.1 All consumer fireworks must comply with certain regulations promulgated by the United States Department of Transportation. These regulations govern approval of fireworks for shipment, construction and testing of their shipping containers, and the marking and labeling of the containers.

NOTE: See **Appendix C** for a summary of these requirements. However, **Appendix C** is only a summary and not a complete discussion. Title 49 of the United States Code should be consulted for complete information.

4-1.2 Product design, packaging, and case packing must produce a finished shipping case in which simultaneous explosion of all the items does not result from ignition of one item in the shipping case.

4-1.3 The package must not be so difficult to open that the contents might be damaged as a result of opening.

4-1.4 These items must be securely packaged for shipping in such a way that they are protected from moisture or physical damage during transportation and so that there is no risk of any of the contents escaping from the shipping case.

© 2009 American Fireworks Standards Laboratory. All Right Reserved.

Appendix A : PROHIBITED and PERMITTED CHEMICALS

TABLE I : Prohibited Chemicals

The following chemicals are prohibited in consumer fireworks:

(a) Arsenic sulfide, arsenates, or arsenites

(b) Boron

(c) Chlorates, except:
   a. In colored smoke mixtures in which an equal or greater weight of sodium bicarbonate is included.
   b. In Party Poppers.
   c. In those small items (such as Ground Spinners) wherein the total powder content does not exceed 4 grams of which not greater than 15 percent (or 600 mg) is potassium, sodium, or barium chlorate.
   d. In Firecrackers.

(d) Gallates or gallic acid

(e) Lead and lead compounds (including red lead oxide)

(f) Hexachlorobenzene (Perchlorobenzene) at the limit to 0.01% by weight.

(g) Magnesium (magnesium/aluminum alloys, called magnalium, are permitted).

(h) Mercury salts

(i) Phosphorus (red or white), except that red phosphorus is permissible in caps and Party Poppers,

(j) Picrates or picric acid

(k) Thiocyanates

(l) Titanium, except in particle size greater than 100 mesh

(m) Zirconium

© 2009 American Fireworks Standards Laboratory. All Right Reserved.

TABLE II: Permitted Chemicals
Standard Fireworks Chemicals

Chemical	**Typical Use**
Aluminium	Fuel
Ammonium Perchlorate	Oxygen Donor
Antimony	Fuel
Antimony Sulfide	Fuel
Barium Carbonate	Neutralizer
Barium Nitrate	Oxygen Donor
Barium Sulfate	Oxygen Donor
Bismuth Oxide	Oxygen Donor
Boric Acid	Neutralizer
Calcium Carbonate	Neutralizer
Calcium Sulfate	Oxygen Donor
Carbon or Charcoal	Fuel
Copper Metal	Color Agent
Copper Oxide	Oxygen Donor, Color Agent
Copper Salts (except Copper Chlorate)	Color Agent
Dextrine	Fuel/Binder
Hexamethylenetetramine (Hexamine)	Fuel
Iron and Iron Alloys (eg. ferro/titanium)	Fuel
Iron Oxide	Oxygen Donor
Magnalium (Magnesium/Aluminum)	Fuel
Magnesium (in display fireworks and theatrical pyrotechnics only)	Fuel
Magnesium Carbonate	Neutralizer
Magnesium Sulfate	Oxygen Donor
Nitrocellulose - see Miscellaneous Compounds	
Nitrocellulose based lacquers	Binder
Phosphorus, Red	Fuel
Potassium or Sodium Benzoate	Whistle
Potassium Bichromate (Potassium Dichromate), not to exceed 5% of formulation	Oxygen Donor
Potassium Chlorate	Oxygen Donor
Potassium Hydrogen Phthalate	Whistle
Potassium Nitrate	Oxygen Donor
Potassium Perchlorate	Oxygen Donor
Potassium Sulfate	Oxygen Donor
Silicon	Fuel
Sodium Bicarbonate (Sodium Hydrogen Carbonate)	Neutralizer
Sodium Nirate	Oxygen Donor
Sodium Salicylate	Whistle
Sodium Salts (except Sodium Chlorate)	Color Agent
Sodium Sulphate	Oxygen Donor
Strontium Carbonate	Color Agent
Strontium Nitrate	Oxygen Donor
Strontium Salts (except Strontium Chlorate)	Color Agent
Strontium Sulfate	Oxygen Donor
Sulfur	Fuel
Titanium (particle size must not pass through 100 mesh sieve if 1.4G or 1.4S Fireworks)	Fuel

© 2009 American Fireworks Standards Laboratory. All Right Reserved.

Miscellaneous Compounds:

Organic compounds (compounds such as lactose, shellac, red gum, chlorinated paraffin and polyvinyl chloride, consisting of some combination of carbon with hydrogen, oxygen and/or chlorine; nitrogen may be present if it accounts for less than 10% (by weight) of the compound.)

Nitrocellulose with not more than 12.6% nitrogen by mass, that meets the criteria for classification as a 4.1 Flammable Solid, is permitted as a propelling or expelling charge provided there is less than 15 grams of nitrocellulose per article.

Note: Exact chemical identity of each "Organic compound" must be included when submitting an Approval Application to DOT.

© 2009 American Fireworks Standards Laboratory. All Right Reserved.

Appendix B : CAUTIONARY LABELING REQUIREMENTS FOR CONSUMER FIREWORKS

Each consumer fireworks device must bear a cautionary label to warn users of the potential risk of injury associated with the product and provide instructions for using the fireworks devices properly. In order to assist manufacturers in complying with the cautionary labeling requirements, AFSL incorporated into the AFSL Standards specific cautionary labeling for each category of 1.4G consumer fireworks. A copy of the Standards is available to AFSL members at no charge and to non- AFSL members for a nominal charge.

In some instances, the AFSL caution labels differ somewhat from the labels published in the U.S. Consumer Product Safety Commission's (CPSC) regulations. The reason is that the AFSL Standards Committee added provisions to enhance the minimum requirements established by CPSC. Any label that complies with the AFSL provisions is considered by CPSC to be in compliance with the CPSC requirements as well.

I. LABEL WORDING

Every fireworks device must bear a cautionary label that typically includes the following elements:

A. A Signal Word. This is designed to attract the user's attention that the information is important and should be read. Typically the signal word will be either "**WARNING**" or "**CAUTION**". The signal word "**WARNING**" typically is used for items that present the potential for more serious injuries. It normally is required on any item that explodes, produces a report, or shoots a projectile into the air. Included are Rockets, Missiles, Helicopters, Reloadable Tube Devices, Comets, Mines and Shells, Roman Candles, and Firecrackers.

Items that pose a less severe potential hazard require the "**CAUTION**" statement of hazard. Included are such items as Fountains, novelty items, Sparklers, Smoke Devices, Party Poppers, etc.

The signal word must be in larger, more prominent type size than other cautions such as the statement of hazard and instructions for use.

B. Statement of Hazard. The statement of hazard is designed to warn the user of the specific aspect of the item's operation that may result in the potential for injury. A statement of hazard includes statements such as: "**FLAMMABLE,**" "**SHOOTS FLAMING BALLS WITH REPORTS,**" "**SPINS ON GROUND,"** "**EMITS SHOWERS OF SPARKS,**" etc.

© 2009 American Fireworks Standards Laboratory. All Right Reserved.

C. Instructions for Use. Instructions for use provide the product user with appropriate information as to how the product should be operated and precautions that should be taken to avoid potential injuries associated with the product. Normally, the instructions for use will include the following statements:

CAUTION
EMITS CRACKLING SPARKS

USE ONLY UNDER CLOSE ADULT SUPERVISION.
FOR OUTDOOR USE ONLY.
PLACE UPRIGHT ON LEVEL SURFACE (or other appropriate instructions for placing the item for ignition).
DO NOT HOLD IN HAND (except for hand-hel items).
LIGHT FUSE AND GET AWAY.
PLACE UPRIGHT ON LEVEL SURFACE (or oter appropriate instructions for

Other statements to be included in the caution label will depend on the type of product and the manner in which it performs.

II. LABEL PLACEMENT

The signal word and statement of hazard must appear on each principal display panel of the fireworks item. In addition, each principal display panel must bear either the remaining cautionary labeling information or instructions to "Carefully Read Cautionary Statements on _____ [insert either side panel, rear panel or back panel, as appropriate]." In such a case, the full cautionary labeling statement, including signal ord and statement of hazard required by the AFSL Standard for the product must appear on the referenced side, rear, or back panel.

"Principal display panel" (PDP) is defined as the portion of each item, and that portion of each retail package, that "bears the labeling designed to be most prominently displayed, shown, presented, or examined under conditions of retail sale." Therefore, a box-type item that has an item name and/or graphics prominently displayed on all four sides must bear a warning label on each side. If the name and/or graphics appear on only one panel, only that panel must bear a warning label. If an item has prominent graphics on one side panel without the product name, but has the product name without graphics in simple text on another panel, both panels could be considered principal display panels.

This interpretation also holds for the retail package. Note: If the retail package has a clear wrapper, and a complete warning label on an individual unit package is clearly legible through the wrapper, no additional warning label is required on the outside wrapper or package.

© 2009 American Fireworks Standards Laboratory. All Right Reserved.

For cylindrical items, the PDP is interpreted to mean 40% of the total surface area of the cylinder, centered at the name of the item. If the warning label appears directly beneath the name of the item, there is no question as to compliance.

For unusually shaped devices, such as frogs, chickens, vases, etc., use the side that will be displayed for retail sale as the PDP.

III CONSPICUOUSNESS AND PROMINENCE

All cautionary labeling must appear in legible type which is in contrast with the background as well as with other printed matter on the item.

Color **-** Use an ink for the printing that contrasts well with the paper. For example, black letters on a dark blue background are not acceptable, whereas black or dark blue type on a white background should always be acceptable. The background for the warning label should be clear and free of any portion of the design, pictures, or other printed matter on the label.

Border **-** The signal word, statement of hazard, and the other cautionary information must be placed together within a square or rectangular area (with or without a border) on each PDP (of each item and each retail package). The caution label must be clearly separated from all other wording printed on the item.

Horizontal Placement **-** The warning label must be printed in lines parallel to the base of the item. ("Base" refers to the base on which the item rests when it is displayed for retail sale.) In those instances where the required cautionary labeling appears on a panel other than the principal display panel, the other cautionary information may appear in lines parallel to other printing on that panel, rather than parallel to the base. This parallel requirement does not apply to narrow-diameter cylinders, where the printing may run lengthwise on the cylinder.

IV. TYPE SIZE REQUIREMENTS

The proper, minimum type size to use for a warning label depends on the area of the PDP of the item. This area must be calculated for each item.

For square or rectangular items, the entire side or panel that bears the name of the item is the PDP. To calculate the PDP area, multiply the length of the base times the height of the item.

For triangular, hexagonal, or other geometric figures with rectangular panels, select the panel (or each panel) that bears the name of the item. Multiply the length of the side bearing the item name times the height of the item to determine the PDP areas.

For cylindrical items, PDP area is calculated by multiplying the height times the diameter times 1.26, PDP Area of Cylinder = Height x diameter x 1.2

© 2009 American Fireworks Standards Laboratory. All Right Reserved.

For irregularly shaped items, you must use your best judgment to determine the PDP area. Contact the AFSL office if you have any questions.

Minimum Type Size

Once you have calculated the area of the PDP, use the table below to determine the minimum type size for the warning label. It is certainly permissible and advisable whenever possible to use a type size larger than the minimum. This might provide a "safety factor" should the printed type fall a little short of your specifications.

Minimum Type Size (in inches)			
Area of Principal Display Panel (square inches)	Signal Word	Statement of Hazard	Other Cautions
0 – 2	3 / 64	3 / 64	2 / 64
>2 – 5	4 / 64	3 / 64	3 / 64
>5 – 10	6 / 64	4 / 64	4 / 64
>10 – 15	7 / 64	6 / 64	4 / 64
>15 – 30	8 / 64	6 / 64	5 / 64
>30	10 / 64	7 / 64	6 / 64

V. EXCEPTIONS FOR VERY SMALL DEVICES

In cases where individual items are too small to accommodate the required cautions (and only in such cases), the required labeling may appear on the retail package in complying type size and placement, rather than on each item, provided that the entire, unbroken package is sold to the retail customer as a unit. Whenever possible, individual items must bear at least the signal word and statement of hazard, with "Carefully Read Instructions on Package" also printed on each item.

VI. SPECIAL LABELING FOR ASSORTMENT PACKAGES

Assortment packages containing a variety of fireworks categories or types must bear the following labeling on the assortment packaging. Requirements for placement, conspicuousness, type size, described above are applicable.

WARNING
THIS ASSORTMENT CONTAINS ITEMS THAT MAY BE HAZARDOUS IF MISUSED AND SHOULD BE USED ONLY UNDER ADULT SUPERVISION. IMPORTANT – READ CAUTIONS ON INDIVIDUAL ITEMS CAREFULLY.

© 2009 American Fireworks Standards Laboratory. All Right Reserved.

Appendix C : SUMMARY OF U.S. DEPARTMENT OF TRANSPORTATION REGULATIONS

I. SUMMARY OF REQUIREMENTS

This appendix contains a brief summary of DOT shipping regulations. For complete details, it is necessary to consult Title 49 of the United States Code. To assist you, each subject will contain the appropriate section number.

A. APPROVAL

Except for samples prepared in accordance with DOT regulations, no fireworks device or novelty may be offered for transportation or transported until it is classed and approved by DOT, and an approval number (EX number) is issued (49 CFR 173.56).

B. CLASSIFICATION

The proper shipping name for all fireworks is “Fireworks.” Hazard classification, with minor exceptions is "1.4G" for consumer fireworks. The UN Number for consumer fireworks is "UN 0336."

C. PACKING GROUPS

Hazardous materials are assigned to a packing group for shipping purposes. All fireworks are in Packing Group II and boxes must be tested and certified accordingly (49 CFR 171.101)

D. MARKING AND LABELING

All shipping cartons must bear an orange diamond shaped hazard label (49 CFR 172.400[a] and 172.411). This must be placed near to and on the same surface as the proper shipping name (e.g., FIREWORKS UN0336) (see 49 CFR 172.301(a)). In addition, each package containing fireworks or the shipping papers must be marked with the EX number for each device in the package. If a package contains more than 5 different devices, only 5 of the applicable numbers need be displayed (49 CFR 172.304). Each package must also be marked with the name of the consignee or consignor unless the package is part of a truckload or freight container lot going from one consignor to one consignee.

E. GENERAL PACKAGING REQUIREMENTS(49 CFR 173.60, 178.516)

As stated above, fireworks are placed in Packing Group II and the packages for transporting such fireworks must be tested to meet the requirements for this group. Nails or staples must not penetrate the outer packaging and there must be no significant movement within the package. Explosives 1.4G may be packed in type 4G fiberboard cartons. Standards for 4G fiberboard cartons may be found in 49 CFR 178.516. Cartons must be coded to show type of box, maximum authorized gross weight, year the box was manufactured, etc. Specific

© 2009 American Fireworks Standards Laboratory. All Right Reserved.

instructions for such marking are found in 49 CFR 178.503. Fireworks must use Packing Method E-130 per the Explosives Table in 49 CFR 173.62.

This requires that "inner packagings" be used with all fireworks. Inner packagings may be fiberboard, paper sheets, plastic, or metal receptacles.

F. TESTING OF PACKAGING (49 CFR 178.601)

Responsibility for testing packaging rests with both the packaging manufacturer and the person who offers the fireworks for transportation, who is responsible for assembly and final closure. Testing includes a drop test, a stacking test, and a water-resistance test. Also, the packaging must be conditioned at controlled temperature and humidity for 24 hours prior to testing (49 CFR 176.602(d)).

G. RETESTING OF PACKAGING (49 CFR 601(e))

Retesting of packaging must be performed at certain intervals. For 4G fiberboard boxes with inner packaging, the interval is at least once every 24 months.

II. CERTAIN NOVELTIES, SPARKLERS, AND SMOKE DEVICES NOT REGULATED AS EXPLOSIVES FOR TRANSPORTATION PURPOSES.

A. APPROVED MATERIALS.

The U.S. Department of Transportation has determined that certain Novelties, Sparklers, and Smoke Devices are not regulated as explosives for transportation purposes, when such devices are manufactured and packaged in accordance with the provisions of the approval. The approval applies only to the transportation of such devices by surface modes. When transported by aircraft, they must be classed as "Flammable Solid," "Inorganic," "N.O.S. (Novelties, UN3178)." In order to qualify for the exemption, each item must be manufactured and packaged as follows:

(1) Snappers

Snappers are small, paper-wrapped items containing not more than 1.0 milligram of silver fulminate coated on small bits of sand or gravel. Snappers must be packaged in an inner package that contains no more than 50 Snappers with sawdust or other impact-absorbing material.

(2) Party Poppers

Party poppers are small devices with paper or plastic exteriors that are activated by means of friction (pulling a string or trigger). Upon activation, the device expels non-flammable paper streamers and/or other non-flammable novelties and produces a small report. Devices may not contain more than 16 milligrams (0.25 grains) of explosive composition. The chemical composition is limited to potassium chlorate and red phosphorus. Party Poppers must be packaged in an inner packaging which contains not more than 72 devices.

© 2009 American Fireworks Standards Laboratory. All Right Reserved.

(3) Toy Smoke Devices

Smoke Devices are small devices made of cork or cardboard containing not more than 5 grams of pyrotechnic composition that produce a small cloud of smoke after activation. Smoke Devices are typically activated by means of a safety fuse. Smoke Devices must be constructed so that they will neither burst nor produce excessive flame (excluding fuse and small but brief bursts of flame accompanying normal smoke production). Smoke Devices may not contain plastic in direct contact with the pyrotechnic composition, and Smoke Devices may not resemble, in color and configuration, banned fireworks devices, such as M-80 Salutes, Cherry Bombs, or Silver Salutes. The chemical composition consists of potassium nitrate and sulfur for white smoke and combinations of potassium chlorate, sulfur, sugar, and organic dyes for colored smoke. All mixtures containing potassium chlorates must also contain an equal amount of a bicarbonate, such as sodium bicarbonate. Smoke Devices must be packaged in an inner packaging that contains no more than 72 devices.

(4) Snakes, Glow Worms

Snakes are pressed pellets of pyrotechnic composition that contain not more than 2 grams of composition per article. Upon burning, snakes produce a snake-like ash that expands in length as the pellet is consumed. The chemical composition consists of ammonium perchlorate, nitrated pitch, asphaltum and carbonaceous materials, but snakes may not contain arsenic. Snakes must be packaged in an inner packaging which contains no more than 25 devices.

(5) Sparklers

Sparklers are devices that consist of a wire or wood dowel coated with pyrotechnic composition that produces a shower of sparks upon ignition. Sparklers that don't contain potassium chlorate or potassium perchlorate may have up to 100 grams of chemical composition per device. Sparklers that contain potassium chlorate or potassium perchlorate may have up to 5 grams of chemical composition per device. The chemical composition consists of a combination of barium nitrate, potassium chlorate, potassium perchlorate, aluminum, magnalium, iron filings, and dextrine. No pure magnesium is permitted. Sparklers must be packaged in an inner packaging that contains no more than 8 devices.

B. TESTING

All novelty devices must be tested for thermal stability. Each finished product in its inner packaging must be tested and shown to be thermally stable at 75 degrees centigrade for a minimum period of 48 hours.

C. PACKAGING

All novelty devices in their inner packaging must be packaged in strong outer packaging. The packages must conform with the requirements of Section 173.24. The maximum gross weight of any single package may not exceed 30 Kg

© 2009 American Fireworks Standards Laboratory. All Right Reserved.

D. MARKING REQUIREMENTS

Each package, and over pack if used, prepared under the provisions of this approval must be plainly marked "NOVELTIES, Not Regulated, Except when Transported by Air, when in Conformance with APA Standards 87-1."

III. MODE OF TRANSPORTATION AUTHORIZED.

Motor vehicle, rail freight, cargo vessel, passenger aircraft* and cargo aircraft*.

***

© 2009 American Fireworks Standards Laboratory. All Right Reserved.

Appendix D : TEST METHOD FOR MULTIPLE-TUBE FIREWORKS

(Mandated for certain items by 16 CFR Section 1507.12)

The device must be placed on a smooth surface that can be inclined to 60 degrees from the horizontal as shown below. The height and width of the inclined plane (not including the portion of the plane below the mechanical stop) must be at least 2.54 cm (1 inch) greater than the largest dimension of the base of the device to be tested. The test must be conducted on a smooth, hard surface that is horizontal as measured by a spirit level or equivalent instrument. The mechanical stop on the inclined plane must be 1.6 mm (1/16 inch) in height and perpendicular to the inclined plane. The stop must be parallel to the bottom edge of the inclined plane and so that no portion of the device to be tested or its base touches the horizontal surface. The device must not tip over when the plane is inclined to 60 degrees from the horizontal. The procedure must be repeated for each edge of the device.

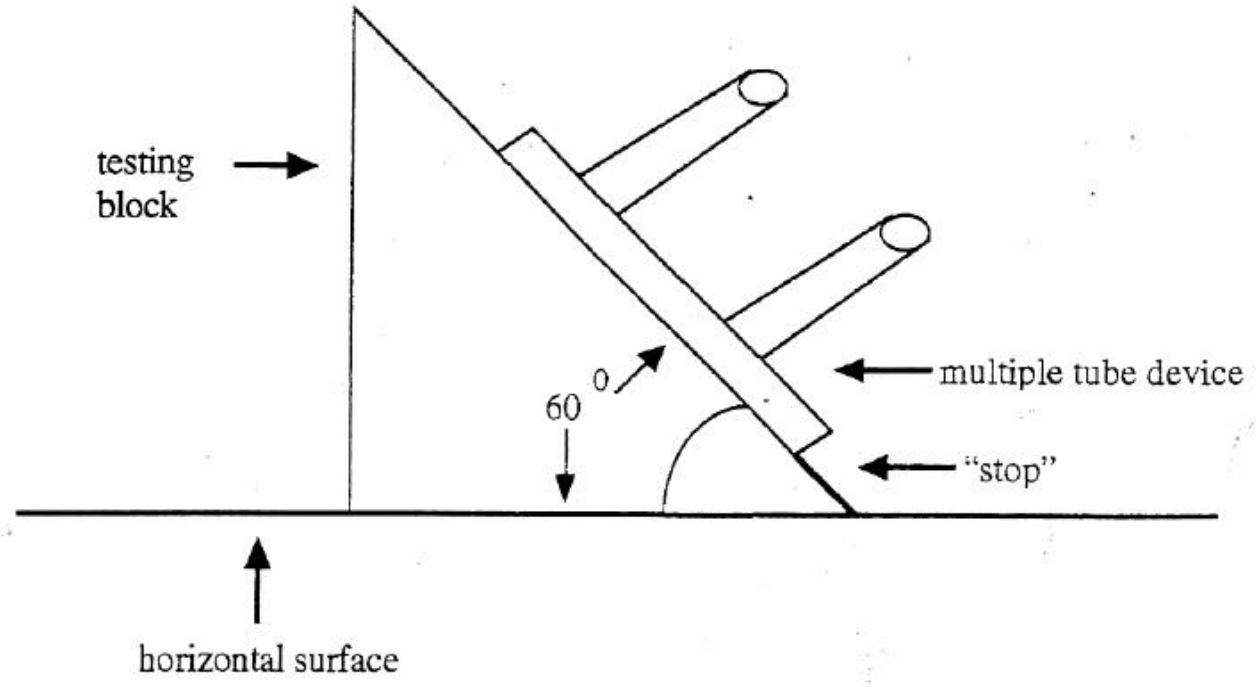

Side view of an apparatus or testing block for testing compliance with the 60-degree tilt angle Standard.

© 2009 American Fireworks Standards Laboratory. All Right Reserved.

Appendix E: DIAGRAM FOR TRAJECTORY OF MINES AND SHELLS

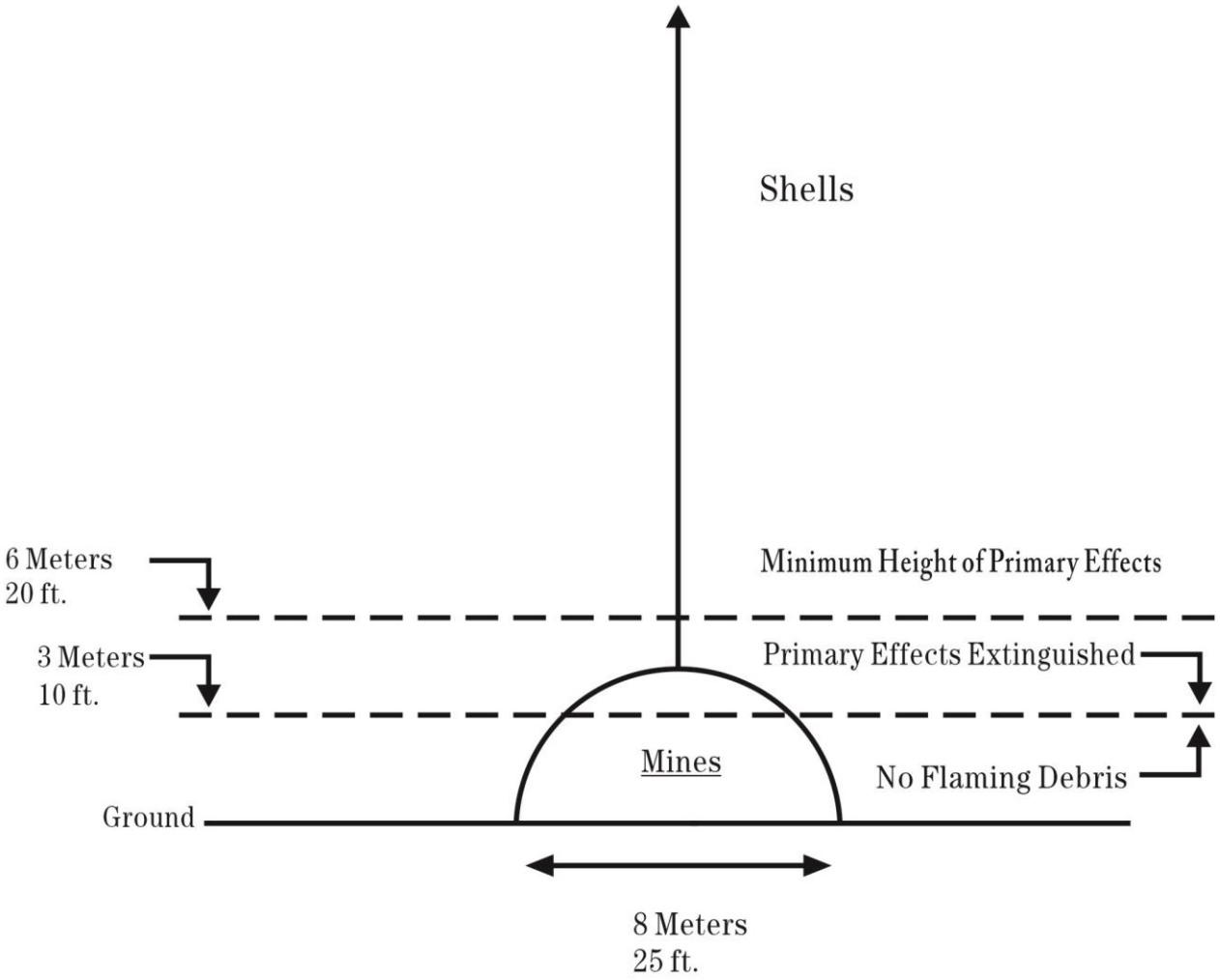

© 2009 American Fireworks Standards Laboratory. All Right Reserved.

Appendix F: SCHEMATIC OF TRAJECTORY AND PERFORMANCE FOR RELOADABLE SHELLS

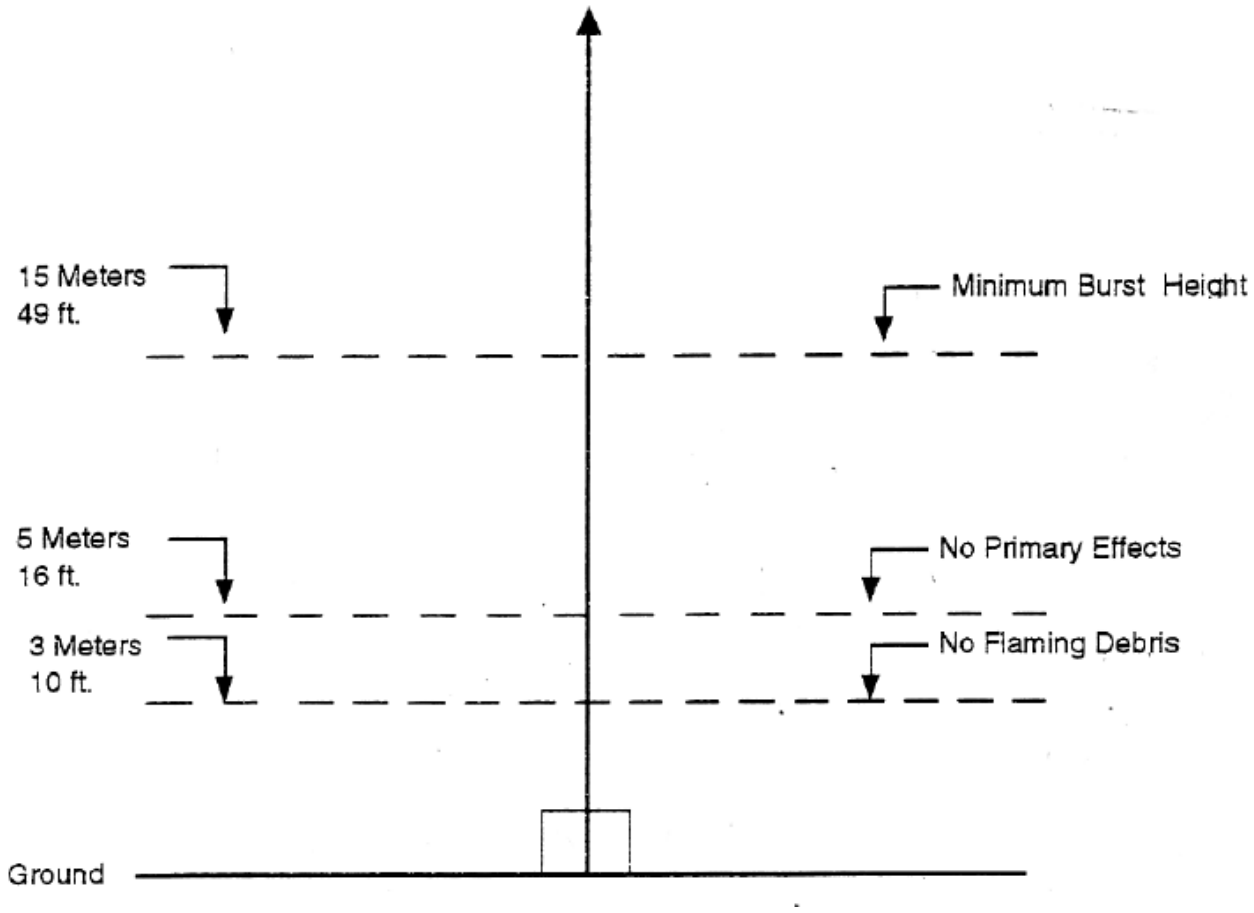

© 2009 American Fireworks Standards Laboratory. All Right Reserved.

Appendix G : SCHEMATIC OF TRAJECTORY REQUIREMENTS FOR SKYROCKETS

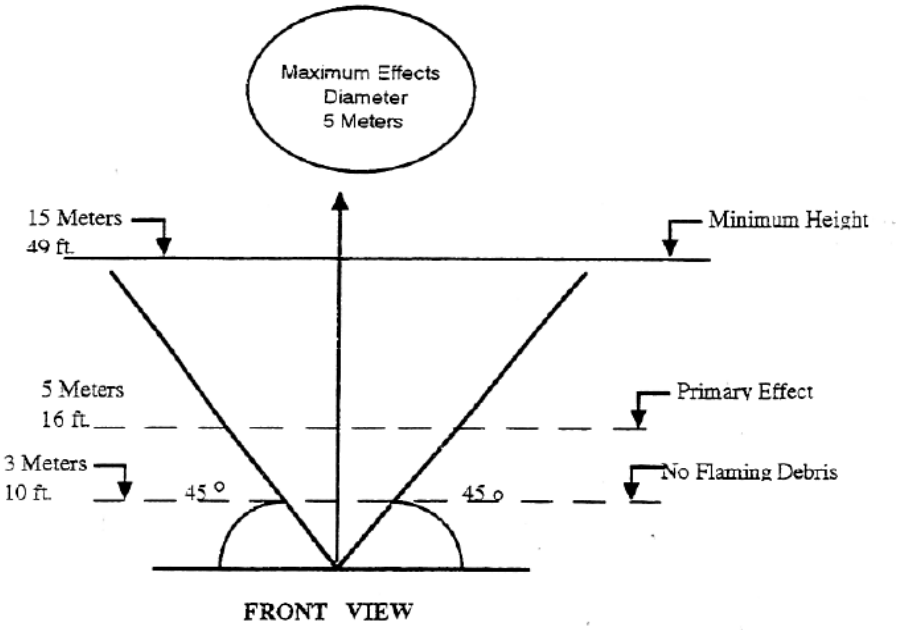

FRONT VIEW

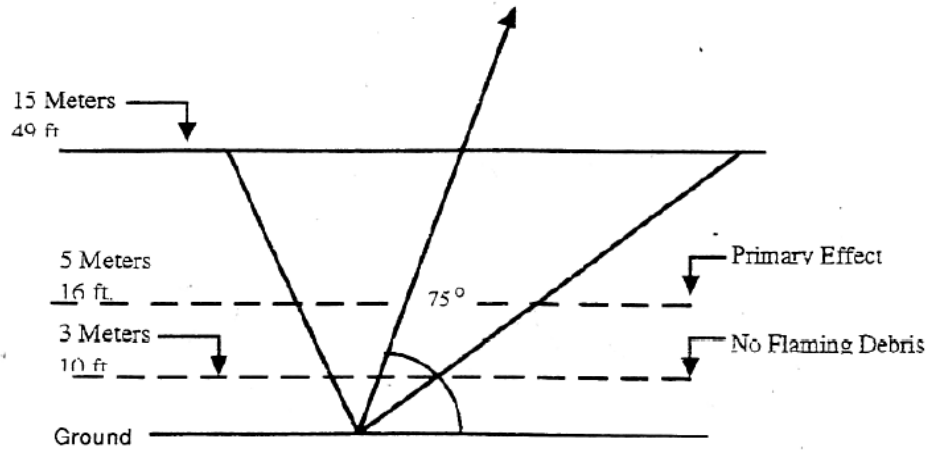

SIDE VIEW

© 2009 American Fireworks Standards Laboratory. All Right Reserved.

Appendix H : SCHEMATIC OF TRAJECTORY REQUIREMENTS FOR MISSILES AND HELICOPTERS

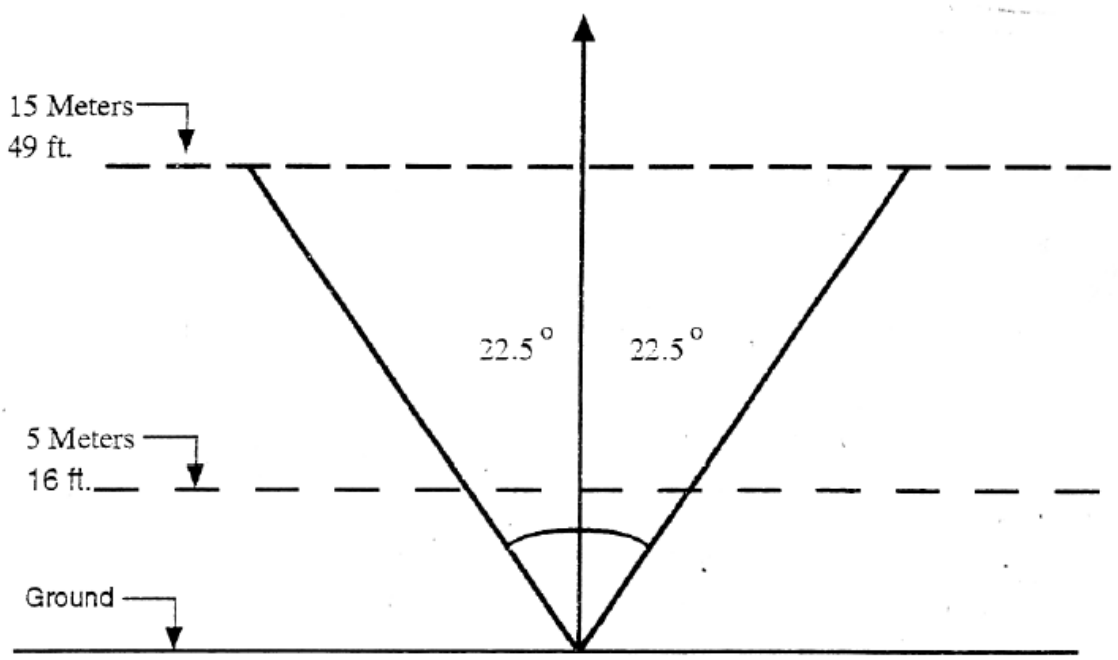

© 2009 American Fireworks Standards Laboratory. All Right Reserved.

Appendix I : RICE HULLS POLICY

Some Aerial Shell devices, including reloadable tube Aerial Shell devices, contain rice hulls included with the pyrotechnic composition contained in the Shell. Some factories coat or impregnate rice hulls in a manner that causes a significant amount of pyrotechnic composition to cling to the rice hulls even through the sieving process. The amount of pyrotechnic composition present in such instances is significant enough that the impregnated rice hulls would contribute to or enhance the force or effect of the Aerial Shell and therefore should be treated as part of the pyrotechnic composition.

Effective February 15, 2004, AFSL has established a policy with respect to how the rice hulls will be treated in determining the total pyrotechnic composition of the device, as follows:

A. If the rice hulls are not impregnated with a pyrotechnic composition and are either kept separate by a barrier from the pyrotechnic composition or are co-mingled with the chemical composition and are readily separable by means of a sieve from the pyrotechnic composition, they are not included in the weight of total pyrotechnic composition or break charge.

B. If the rice hulls are impregnated with a pyrotechnic composition, they will be considered part of the chemical composition as well as the break charge.

C. The use of any plant seed, such as soy beans, is not permitted in any fireworks device due to agricultural concerns.

The term "readily separable" means that the rice hulls may be separated from pyrotechnic composition by the use a mesh sieve.

TESTING PROCEDURE

The determination whether rice hulls are impregnated or not impregnated will be made by visual observation by the technician. Photograph A below shows rice hulls that are not impregnated. Photograph B shows rice hulls that are impregnated. All chemical composition, including rice hulls, effect, etc., will be separated manually by mesh sieve (20-mesh). Relevant portions of charges will be counted either as pyrotechnic composition, effect, or break charge.

(A): Rice Hulls are NOT impregnated

(B): Rice Hulls are impregnated.

© 2009 American Fireworks Standards Laboratory. All Right Reserved.

Appendix J : ASSORTMENTS

A FIREWORKS ASSORTMENT IS DEFINED UNDER THE QIP AS A PACKAGE --

- **CONTAINING ITEMS FROM MORE THAN ONE AFSL FIREWORKS CATEGORY, (e.g. Fountains, Rockets, Ground Spinners, Sparklers, etc.)**

- **CONTAINING MULTIPLE SIZES (BY DIMENSION) OF ANY SPECIFIC FIREWORKS CATEGORY, (e.g. 4oz. rocket, 8 oz. rocket, 12 oz. rocket)**

- **CONTAINING ITEMS WITH REPORTS AND ITEMS WITHOUT REPORTS, (e.g. 8 oz. rocket with green stars, 8 oz. rocket with reports, 8 oz. rocket with crackling red stars)**

- **CONTAINING MORE THAN SIX DIFFERENT VARIETIES OF A DEVICE IN ONE CATEGORY; EXCEPTION: 12 DIFFERENT VARIETIES OF RELOADABLE SHELLS**

For packages containing six or fewer different varieties of items within the same category, these packages will be tested as regular merchandise rather than assortments. Each variety within the package will be treated as a sub-sample subject to full testing under the applicable sampling plan.

A variety of an item includes (a) different sizes by dimension; (b) the presence or absence of "reports"; and (c) other substantially different effects such as stars and whistles. Minor variations in effects, such as different color stars, are not considered to be a different variety.

© 2009 American Fireworks Standards Laboratory. All Right Reserved.

Appendix K : Incendiary Spark Ignition Test Procedure for Crackling Strip Packaging

1.1. **Test Equipment**

1.1.1. The incendiary spark ignition source shall be a pyrotechnic device that discharges a jet of flame and a directed spray of sparks while it is burning. It shall meet the requirements specified in Section 1.1.

Note: The AFSL will provide the spark-producing devices to the test teams. A standard device will be used for this testing, and each shipping carton of the test devices will be checked for proper functioning.

1.1.2. The pyrotechnic device shall burn for a minimum duration of 30 seconds and a maximum duration of 35 seconds.

1.1.3. The pyrotechnic device shall propel a spray of sparks a minimum distance of 1.5 meters (60 in.)

1.1.4. The pyrotechnic device shall produce an external flame that is 50 mm (2 in.) to 150mm (6 in.) in length.

1.1.5. The tube on the spark-producing device shall be a minimum of 25 mm (1 in) in diameter and shall not exceed 200mm (8 in) in length.

2.2. **Geometry and Construction of the Incendiary Spark Test Environment**

2.2.1. The test shall be conducted outdoors or in a well-ventilated room containing no consumer fireworks; flammable or combustible liquids; or explosive materials; other than the ignition source and the test sample.

2.2.2. A table or similar flat, level, elevated horizontal surface shall be used to support the test sample and the incendiary spark ignition source including its supports.

3.3. **Attachment of Test Sample and the Incendiary Spark Ignition Source**

3.3.1. The associated cover/packaging of the crackling strip device shall be tested.

3.3.2. The test sample shall be placed on a table or similar flat test surface in an upright position as specified by the manufacturer for ignition of the sample being tested.

© 2009 American Fireworks Standards Laboratory. All Right Reserved.

3.3.3. The test sample shall be securely attached to the test surface in a manner that that prevents is from being dislodged during the test.

3.3.4. The incendiary spark ignition source shall be positioned so that the spark-producing end of the device is placed 24 in. +/- ¼ in. from the test sample.
3.3.5. The spark producing end of the incendiary spark ignition source shall be positioned so it is in a direct horizontal line with the test sample.

Note: *This is best accomplished by placing bricks or similar noncombustible fire-resistant materials under the incendiary spark ignition source to raise it to the proper height.*

3.3.6. The incendiary spark ignition source shall be secured in position in a manner that prevents any movement of the device during its discharge.

Note: *This is best accomplished by placing bricks or similar noncombustible fire-resistant materials on top of and surrounding the incendiary spark ignition source to keep it in position.*

3.3.7. The test sample shall not be modified in any manner prior to the test.

3.3.8. The incendiary spark ignition source used as the ignition source shall be checked for proper positioning.

4.4. **Number of Tests**

4.4.1. Three separate and identical tests shall be conducted for this test procedure.

4.4.2. The tested lot will be failed if a failure occurs as determined in accordance with 2.8.

5.5. **Timing of the Incendiary Spark Ignition Source**

5.5.1. The incendiary spark ignition source shall be ignited.

5.5.2. All personnel shall leave the test area once ignition of the incendiary spark ignition source occurs and shall not return the test area until it is safe to do so.

Note: The safety of the test area should be reviewed prior to the test and should include a consideration of the smoke produced by all pyrotechnic test devices.

5.5.3. Personnel observing the test shall be protected from discharged pyrotechnic material.

Note. Personnel observing the testing should be located behind a protective screen or an adequate distance away so as to not be in danger of being impacted by the discharge from the pyrotechnic device or the test sample.

© 2009 American Fireworks Standards Laboratory. All Right Reserved.

2.5.4. If personnel are located behind a protective screen, any viewing ports shall be made from heat and impact resistant transparent material.

6.6. **Time Measurements**

6.6.1. A stopwatch, which measures time in integral seconds, shall be started when the incendiary spark ignition source begins emitting incendiary sparks.

6.6.2. If discharge of the sample occurs, the elapsed time to the initiation of the discharge shall be recorded.

7.7. **Environmental and Safety Conditions**

7.7.1. The air temperature in the test area shall be a minimum of 50°F (10°C).

7.7.2. If the test is conducted outdoors, barriers or windscreens shall be placed so that wind does not affect the stability of the pyrotechnic device used as the ignition source or the test sample being tested or the trajectory of the incendiary sparks generated by the pyrotechnic device.

7.7.3There shall not be any precipitation falling in the test area during the test.

8.8 **Interpretation of Results**

8.8.1. A failure is indicated if the crackling strip sample discharges within 30 seconds after the stopwatch in 2.6.1 is started.

© 2009 American Fireworks Standards Laboratory. All Right Reserved.

Appendix L : Test Procedure for Multiple-tube Fountains using Thermal Detector.

A. Samples:

The samples used for this test will be the same items selected for Performance Testing under the AFSL testing program.

B. Sample Conditioning*:

Place the samples in a warm, dry room at a temperature of 100°F - 120°F for 24 hours.* Conduct performance tests in accordance with normal procedures.

***NOTE:** This provision is waived until Centralized Testing is re-established.

C. Residual Burning Test Procedure:

Following functioning of the devices in the performance test, allow the items to sit for 30 minutes. If ignition of the tubes or other internal components of a device occurs during the 30-minute observation period, record that devices as a "Failure".

After the 30-minute observation period, using the Thermal Detector (see below) positioned 11 inches from the top of the device, scan the entire inside area of the device, and record the maximum internal temperature that can be detected in each of the devices.

If the maximum internal temperature remains above 250°F (121°C), record that device as a "Failure".

© 2009 American Fireworks Standards Laboratory. All Right Reserved.

Appendix M : Requirements for Special Warning Label on Reloadable Aerial Shell Launcher Tube

A. The new label must be printed on the principal display panel near the rim (top edge) of the tube. For cylindrical shaped devices, 40% of the surface area of the entire tube is treated as the principal display panel. The principal display panel also is the area where the name of the product is most prominently displayed. The surface area of the entire tube will be treated as the principal display panel for purposes of determining the appropriate type size. AFSL requests that the label be designed so that it is fully readable on the principal display panel of the tube without having to turn the tube in any direction to read any part of the label.

B. The "danger" triangle should be printed in yellow with a black border and must be an equilateral triangle, consistent with the international symbol for "danger", which it represents. The height of the triangle must be equal to the height of the signal word "DANGER".

C. The Signal word "DANGER" must be printed in a minimum type size of 8/64 for a typical tube designed for 1.75 in shells. See Appendix C in AFSL standards. For smaller or larger tubes, follow the type size requirements in Appendix C.

D. The remainder of the wording must be printed in a minimum type size of 6/64 for a typical tube designed for 1.75 inch shells. See Appendix C in AFSL standards. For tubes that are larger or smaller than the standard size for 1.75 inch shells, follow the type size requirements in Appendix C.

E. The background of the label must be white and the wording of the labeling (except for the yellow triangle), must be in bold, black or other similarly dark type.

F. The warning label must not include any other artwork, graphics, logos or other designs so as not to detract from the message being presented.

See the sample warning label as below:

© 2009 American Fireworks Standards Laboratory. All Right Reserved.

DANGER: <u>DO NOT</u> HOLD LAUNCHER TUBE IN HAND OR PLACE AGAINST BODY DURING USE – SERIOUS INJURY OR DEATH COULD RESULT!

© 2009 American Fireworks Standards Laboratory. All Right Reserved.